DAIKIN

INSTALLATION MANUAL

Super Multi Plus System air conditioner

RMXS112E7V3B
RMXS140E7V3B
RMXS160E7V3B

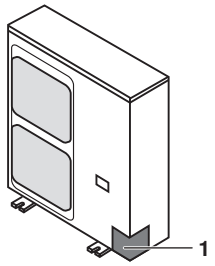

1

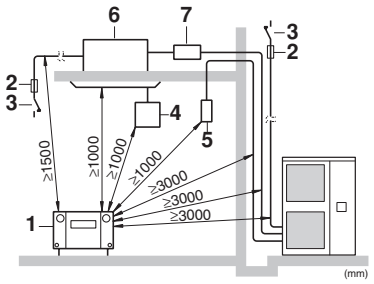

2

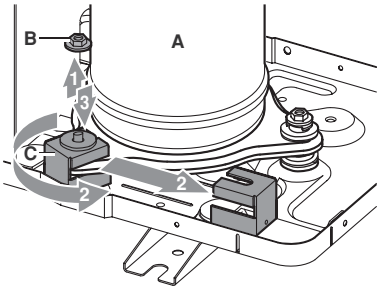

3

								A	B1	B2	C	D1	D2	E	L1/L2	
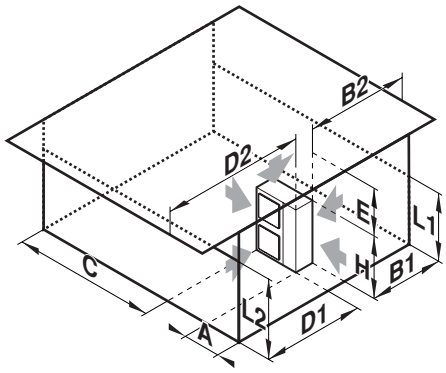	✓								≥100							
	✓		✓	✓				≥100	≥100		≥100					
	✓				✓				≥100				≤500	≥1000		
	✓		✓	✓	✓			≥150	≥150		≥150		≤500	≥1000		
		✓										≥500				
		✓			✓					≤500		≥500		≥1000		
	✓	✓				L2>H			≥100			≥500				3
						L2<H			≥100			≥500				
	✓	✓			✓	L2>H	L1≤H		≥250	≤500		≥750		≥1000	0<L1≤½ H	1
												≥1000			½ H<L1≤H	
							H<L1	L1≤H								
						L2<H	L2≤H		≥100			≥1000	≤500	≥1000	0<L2≤½ H	3
									≥200						½ H<L2≤H	
							H<L2	L2≤H								
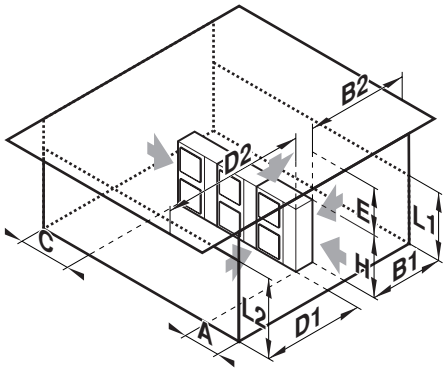	✓		✓	✓				≥200	≥300		≥1000					
	✓		✓	✓	✓			≥200	≥300		≥1000		≤500	≥1000		
		✓										≥1000				
		✓			✓					≤500		≥1000		≥1000		
	✓	✓				L2>H			≥300			≥1000				
						L2<H			≥250			≥1500			0<L2≤½ H	3
									≥300						½ H<L2≤H	
	✓	✓			✓	L2>H	L1≤H		≥300	≤500		≥1000		≥1000	0<L1≤½ H	1+2
												≥1250			½ H<L1≤H	
							H<L1	L1≤H								
						L2<H	L2≤H		≥250			≥1500	≤500	≥1000	0<L2≤½ H	3
									≥300						½ H<L2≤H	
							H<L2	L2≤H								

4

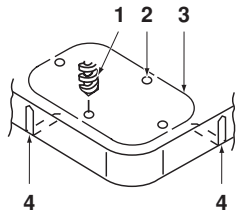

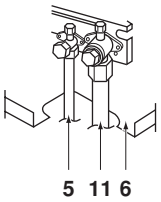

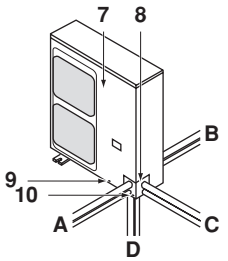

5

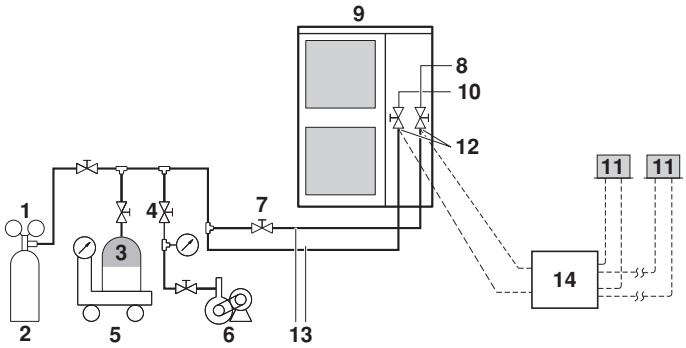

6

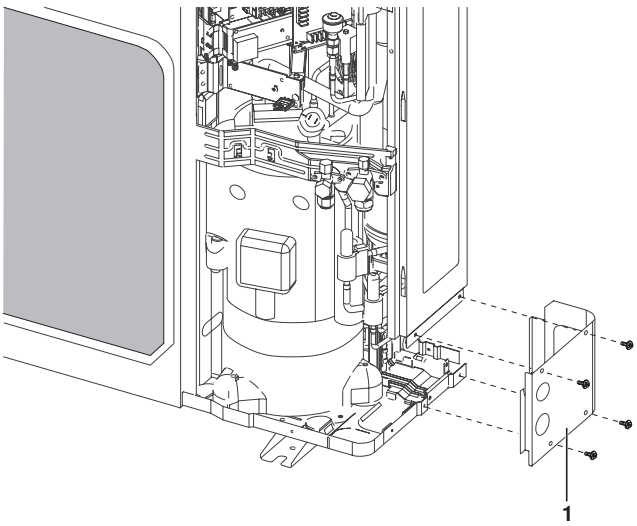

7

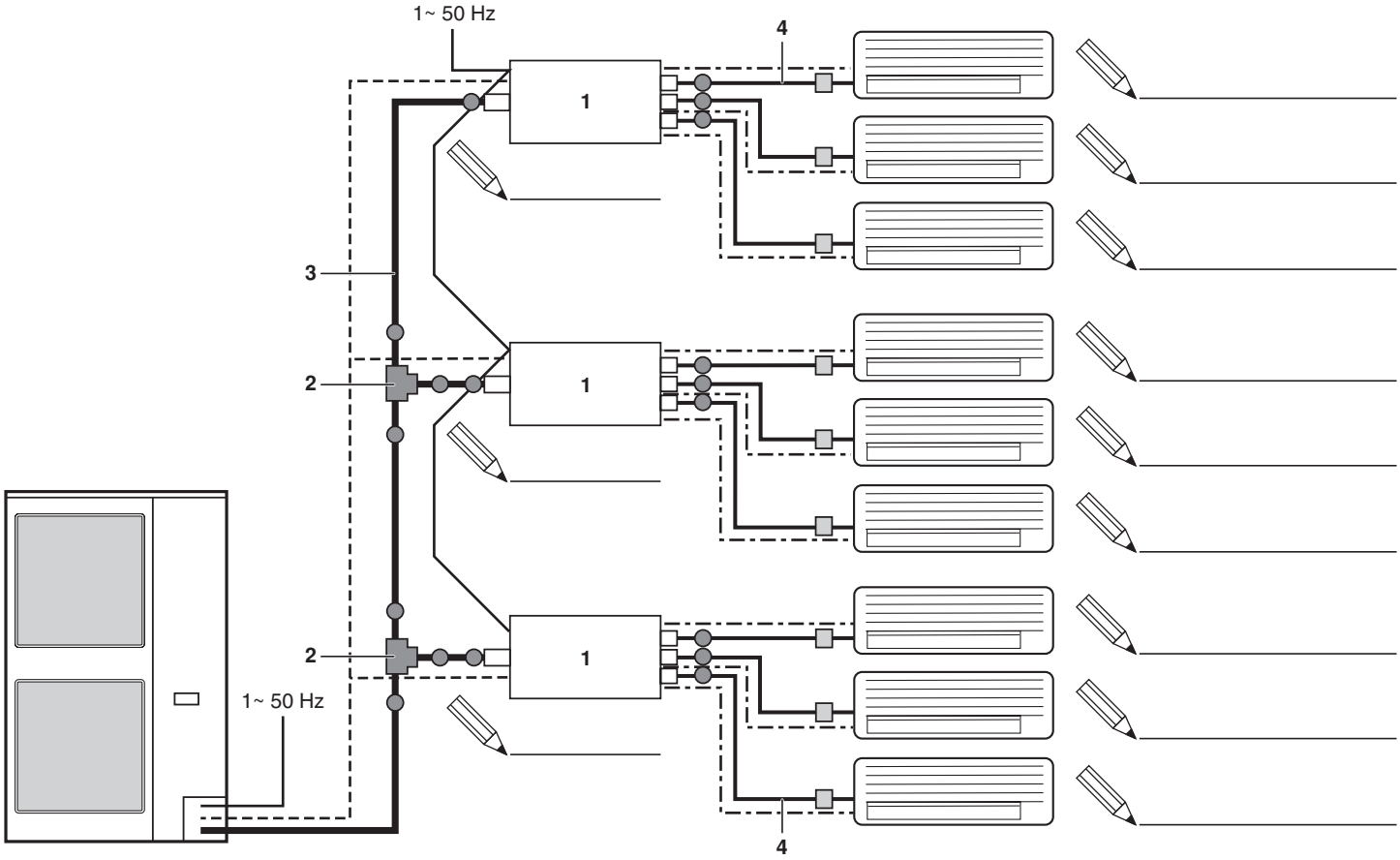

8

NOTES

CE - DECLARATION-OF-CONFORMITY
CE - KONFORMITÄTSERKLÄRUNG
CE - DECLARATION-DE-CONFORMITE
CE - CONFORMITEITSVERKLARING
CE - DECLARACION-DE-CONFORMIDAD
CE - DICHIARAZIONE-DI-CONFORMITA
CE - ΔΗΛΩΣΗ ΣΥΜΜΟΡΦΩΣΗΣ
CE - DECLARAÇÃO-DE-CONFORMIDADE
CE - ЗАЯВЛЕНИЕ-О-СООТВЕТСТВИИ
CE - OPFYLDELSESERKLÆRING
CE - FÖRSÄKRAN-OM-ÖVERENSTÄMMELSE
CE - ERKLÆRING OM-SAMSVAR
CE - ILMOITUS-YHDENMUKAISUUDESTA
CE - PROHLÁŠENÍ-O-SHODĚ
CE - IZJAVA-O-USKLAĐENOSTI
CE - MEGFELELŐSÉGI-NYILATKOZAT
CE - DEKLARACJA-ZGODNOŚCI
CE - DECLARAŢIE-DE-CONFORMITATE
CE - IZJAVA O SKLADNOSTI
CE - VASTAVUSDEKLARATSIOON
CE - ДЕКЛАРАЦИЯ-ЗА-СЪОТВЕТСТВИЕ
CE - ATITIKTIES-DEKLARACIJA
CE - ATBILSTĪBAS-DEKLARĀCIJA
CE - VYHLÁSENIE-ZHODY
CE - UYUMLULUK-BİLDİRİSİ

Daikin Europe N.V.

01 (GB) declares under its sole responsibility that the air conditioning models to which this declaration relates:
02 (D) erklärt auf seine alleinige Verantwortung daß die Modelle der Klimageräte für die diese Erklärung bestimmt ist:
03 (F) déclare sous sa seule responsabilité que les appareils d'air conditionné visés par la présente déclaration:
04 (NL) verklaart hierbij op eigen exclusieve verantwoordelijkheid dat de airconditioning units waarop deze verklaring betrekking heeft:
05 (E) declara baja su única responsabilidad que los modelos de aire acondicionado a los cuales hace referencia la declaración:
06 (I) dichiara sotto sua responsabilità che i condizionatori modello a cui è riferita questa dichiarazione:
07 (GR) δηλώνει με αποκλειστική της ευθύνη ότι τα μοντέλα των κλιματιστικών συσκευών στα οποία αναφέρεται η παρούσα δήλωση:
08 (P) declara sob sua exclusiva responsabilidade que os modelos de ar condicionado a que esta declaração se refere:
09 (RUS) заявляет, исключительно под свою ответственность, что модели кондиционеров воздуха, к которым относится настоящее заявление:
10 (DK) erklærer under eneansvar, at klimaanlægmodellerne, som denne deklaration vedrører:
11 (S) deklarerar i egenskap av huvudansvarig, att luftkonditioneringsmodellerna som berörs av denna deklaration innebär att:
12 (N) erklærer et fullstendig ansvar for at de luftkondisjoneringsmodeller som berøres av denne deklarasjon innebærer at:
13 (FIN) ilmoittaa yksinomaan omalla vastuullaan, että tämän ilmoituksen tarkoittamat ilmastointilaitteiden mallit:
14 (CZ) prohlašuje ve své plné odpovědnosti, že modely klimatizace, k nimž se toto prohlášení vztahuje:
15 (HR) izjavljuje pod isključivo vlastitom odgovornošću da su modeli klima uređaja na koje se ova izjava odnosi:
16 (H) teljes felelőssége tudatában kijelenti, hogy a klímaberendezés modellek, melyekre e nyilatkozat vonatkozik:
17 (PL) deklaruje na własną i wyłączną odpowiedzialność, że modele klimatyzatorów, których dotyczy niniejsza deklaracja:
18 (RO) declară pe proprie răspundere că aparatele de aer condiţionat la care se referă această declaraţie:
19 (SLO) z vso odgovornostjo izjavlja, da so modeli klimatskih naprav, na katere se izjava nanaša:
20 (EST) kinnitab oma täielikul vastutusel, et käesoleva deklaratsiooni alla kuuluvad kliimaseadmete mudelid:
21 (BG) декларира на своя отговорност, че моделите климатична инсталация, за които се отнася тази декларация:
22 (LT) visiška savo atsakomybe skelbia, kad oro kondicionavimo prietaisų modeliai, kuriems yra taikoma ši deklaracija:
23 (LV) ar pilnu atbildību apliecina, ka tālāk uzskaitīto modeļu gaisa kondicionētāji, uz kuriem attiecas šī deklarācija:
24 (SK) vyhlasuje na vlastnú zodpovednosť, že tieto klimatizačné modely, na ktoré sa vzťahuje toto vyhlásenie:
25 (TR) tamamen kendi sorumluluğunda olmak üzere bu bildirinin ilgili olduğu klima modellerinin aşağıdaki gibi olduğunu beyan eder:

RMXS112E7V3B*, RMXS140E7V3B*, RMXS160E7V3B*,

* = , , 1, 2, 3, ..., 9

01 are in conformity with the following standard(s) or other normative document(s), provided that these are used in accordance with our instructions:
02 der/den folgenden Norm(en) oder einem anderen Normdokument oder -dokumenten entspricht/entsprechen, unter der Voraussetzung, daß sie gemäß unseren Anweisungen eingesetzt werden:
03 sont conformes à la/aux norme(s) ou autre(s) document(s) normatif(s), pour autant qu'ils soient utilisés conformément à nos instructions:
04 conform de volgende norm(en) of één of meer andere bindende documenten zijn, op voorwaarde dat ze worden gebruikt overeenkomstig onze instructies:
05 están en conformidad con la(s) siguiente(s) norma(s) u otro(s) documento(s) normativo(s), siempre que sean utilizados de acuerdo con nuestras instrucciones:
06 sono conformi al(i) seguente(i) standard(s) o altro(i) documento(i) a carattere normativo, a patto che vengano usati in conformità alle nostre istruzioni:
07 είναι σύμφωνα με το(α) ακόλουθο(α) πρότυπο(α) ή άλλο έγγραφο(α) κανονισμών, υπό την προϋπόθεση ότι χρησιμοποιούνται σύμφωνα με τις οδηγίες μας:
08 estão em conformidade com a(s) seguinte(s) norma(s) ou outro(s) documento(s) normativo(s), desde que estes sejam utilizados de acordo com as nossas instruções:
09 соответствуют следующим стандартам или другим нормативным документам, при условии их использования согласно нашим инструкциям:
10 overholder følgende standard(er) eller andet/andre retningsgivende dokument(er), forudsat at disse anvendes i henhold til vore instrukser:
11 respektive utrustning är utförd i överensstämmelse med och följer följande standard(er) eller andra normgivande dokument, under förutsättning att användning sker i överensstämmelse med våra instruktioner:
12 respektive utstyr er i overensstemmelse med følgende standard(er) eller andre normgivende dokument(er), under forutssetning av at disse brukes i henhold til våre instrukser:
13 vastaavat seuraavien standardien ja muiden ohjeellisten dokumenttien vaatimuksia edellyttäen, että niitä käytetään ohjeidemme mukaisesti:
14 za předpokladu, že jsou využívány v souladu s našimi pokyny, odpovídají následujícím normám nebo normativním dokumentům:
15 u skladu sa slijedećim standardom(ima) ili drugim normativnim dokumentom(ima), uz uvjet da se oni koriste u skladu s našim uputama:
16 megfelelnek az alábbi szabvány(ok)nak vagy egyéb irányadó dokumentum(ok)nak, ha azokat előírás szerint használják:
17 spełniają wymogi następujących norm i innych dokumentów normalizacyjnych, pod warunkiem że używane są zgodnie z naszymi instrukcjami:
18 sunt în conformitate cu următorul (următoarele) standard(e) sau alt(e) document(e) normativ(e), cu condiţia ca acestea să fie utilizate în conformitate cu instrucţiunile noastre
19 skladni z naslednjimi standardi in drugimi normativi, pod pogojem, da se uporabljajo v skladu z našimi navodili:
20 on vastavuses järgmis(t)e standardi(te)ga või teiste normatiivsete dokumentidega, kui neid kasutatakse vastavalt meie juhenditele:
21 съответстват на следните стандарти или други нормативни документи, при условие, че се използват съгласно нашите инструкции:
22 atitinka žemiau nurodytus standartus ir (arba) kitus norminius dokumentus su sąlyga, kad yra naudojami pagal mūsų nurodymus:
23 tad, ja lietoti atbilstoši ražotāja norādījumiem, atbilst sekojošiem standartiem un citiem normatīviem dokumentiem:
24 sú v zhode s nasledovnou(ými) normou(ami) alebo iným(i) normatívnym(i) dokumentom(ami), za predpokladu, že sa používajú v súlade s našim návodom:
25 ürünün, talimatlarımıza göre kullanılması koşuluyla aşağıdaki standartlar ve norm belirten belgelerle uyumludur:

EN60335-2-40,

01 following the provisions of:
02 gemäß den Vorschriften der:
03 conformément aux stipulations des:
04 overeenkomstig de bepalingen van:
05 siguiendo las disposiciones de:
06 secondo le prescrizioni per:
07 με τήρηση των διατάξεων των:
08 de acordo com o previsto em:
09 в соответствии с положениями:
10 under iagttagelse af bestemmelserne i:
11 enligt villkoren i:
12 gitt i henhold til bestemmelsene i:
13 noudattaen määräyksiä:
14 za dodržení ustanovení předpisu:
15 prema odredbama:
16 követi a(z):
17 zgodnie z postanowieniami Dyrektyw:
18 în urma prevederilor:
19 ob upoštevanju določb:
20 vastavalt nõuetele:
21 следвайки клаузите на:
22 laikantis nuostatų, pateikiamų:
23 ievērojot prasības, kas noteiktas:
24 održiavajúc ustanovenia:
25 bunun koşullanna uygun olarak:

Low Voltage 73/23/EEC
Machinery Safety 98/37/EEC
Electromagnetic Compatibility 89/336/EEC *

01 Directives, as amended.
02 Direktiven, gemäß Änderung.
03 Directives, telles que modifiées.
04 Richtlijnen, zoals geamendeerd.
05 Directivas, según lo enmendado.
06 Direttive, come da modifica.
07 Οδηγιών, όπως έχουν τροποποιηθεί.
08 Directivas, conforme alteração em.
09 Директив со всеми поправками.
10 Direktiver, med senere ændringer.
11 Direktiv, med företagna ändringar.
12 Direktiver, med foretatte endringer.
13 Direktiivejä, sellaisina kuin ne ovat muutettuina.
14 v platném znění.
15 Smjernice, kako je izmijenjeno.
16 irányelv(ek) és módosításaik rendelkezéseit.
17 z późniejszymi poprawkami.
18 Directivelor, cu amendamentele respective.
19 Direktive z vsemi spremembami.
20 Direktiivid koos muudatustega.
21 Директиви, с техните изменения.
22 Direktyvose su papildymais.
23 Direktīvās un to papildinājumos.
24 Smernice, v platnom znení.
25 Değiştirilmiş halleriyle Yönetmelikler.

01 **Note** * as set out in the Technical Construction File **DAIKIN.TCF.015** and judged positively by **KEMA** according to the **Certificate 74736-KRQ/EMC97-4957**.
02 **Hinweis** * wie in der Technischen Konstruktionsakte **DAIKIN.TCF.015** aufgeführt und von **KEMA** positiv ausgezeichnet gemäß **Zertifikat 74736-KRQ/EMC97-4957**.
03 **Remarque** * tel que stipulé dans le Fichier de Construction Technique **DAIKIN.TCF.015** et jugé positivement par **KEMA** conformément au **Certificat 74736-KRQ/EMC97-4957**.
04 **Bemerk** * zoals vermeld in het Technisch Constructiedossier **DAIKIN.TCF.015** en in orde bevonden door **KEMA** overeenkomstig **Certificaat 74736-KRQ/EMC97-4957**.
05 **Nota** * tal como se expone en el Archivo de Construcción Técnica **DAIKIN.TCF.015** y juzgado positivamente por **KEMA** según el **Certificado 74736-KRQ/EMC97-4957**.
06 **Nota** * delineato nel File Tecnico di Costruzione **DAIKIN.TCF.015** e giudicato positivamente da **KEMA** secondo il **Certificato 74736-KRQ/EMC97-4957**.
07 **Σημείωση** * όπως προσδιορίζεται στο Αρχείο Τεχνικής Κατασκευής **DAIKIN.TCF.015** και κρίνεται θετικά από το **KEMA** σύμφωνα με το **Πιστοποιητικό 74736-KRQ/EMC97-4957**.
08 **Nota** * tal como estabelecido no Ficheiro Técnico de Construção **DAIKIN.TCF.015** e com o parecer positivo de **KEMA** de acordo com o **Certificado 74736-KRQ/EMC97-4957**.
09 **Примечание** * как указано в Досье технического толкования **DAIKIN.TCF.015** и в соответствии с положительным решением **KEMA** согласно **Свидетельству 74736-KRQ/EMC97-4957**.
10 **Bemærk** * som anført i den Tekniske Konstruktionsfil **DAIKIN.TCF.015** og positivt vurderet af **KEMA** i henhold til **Certifikat 74736-KRQ/EMC97-4957**.
11 **Information** * utrustningen är utförd i enlighet med den Tekniska Konstruktionsfilen **DAIKIN.TCF.015** som positivt intygas av **KEMA** vilket också framgår av **Certifikat 74736-KRQ/EMC97-4957**.
12 **Merk** * som det fremkommer i den Tekniske Konstruksjonsfilen **DAIKIN.TCF.015** og gjennom positiv bedømmelse av **KEMA** ifølge **Sertifikat 74736-KRQ/EMC97-4957**.
13 **Huom** * jotka on esitetty Teknisessä Asiakirjassa **DAIKIN.TCF.015** ja jotka **KEMA** on hyväksynyt **Sertifikaatin 74736-KRQ/EMC97-4957** mukaisesti.
14 **Poznámka** * jak bylo uvedeno v souboru technické konstrukce **DAIKIN.TCF.015** a pozitivně zjištěno **KEMA** v souladu s **osvědčením 74736-KRQ/EMC97-4957**.
15 **Napomena** * kako je izloženo u Datoteci o tehničkoj konstrukciji **DAIKIN.TCF.015** i pozitivno ocijenjeno od strane **KEMA** prema **Certifikatu 74736-KRQ/EMC97-4957**.
16 **Megjegyzés** * a(z) **DAIKIN.TCF.015** műszaki konstrukciós dokumentáció alapján, a(z) **KEMA** igazolta a megfelelést a(z) **74736-KRQ/EMC97-4957 tanúsítvány** szerint.
17 **Uwaga** * zgodnie z archiwalną dokumentacją konstrukcyjną **DAIKIN.TCF.015**, pozytywną opinią **KEMA** i **Świadectwem 74736-KRQ/EMC97-4957**.
18 **Notă** * conform celor stabilite în Dosarul tehnic de construcţie **DAIKIN.TCF.015** şi apreciate pozitiv de **KEMA** în conformitate cu **Certificatul 74736-KRQ/EMC97-4957**.
19 **Opomba** * kot je določeno v tehnični mapi **DAIKIN.TCF.015** in odobreno s strani **KEMA** v skladu s **certifikatom 74736-KRQ/EMC97-4957**.
20 **Märkus** * nagu on näidatud tehnilises dokumentatsioonis **DAIKIN.TCF.015** ja heaks kiidetud **KEMA** järgi vastavalt **sertifikaadile 74736-KRQ/EMC97-4957**.
21 **Забележка** * както е заложено в Акта за техническа конструкция **DAIKIN.TCF.015** и оценено положително от **KEMA** съгласно **Сертификат 74736-KRQ/EMC97-4957**.
22 **Pastaba** * kaip nurodyta Techninėje konstrukcijos byloje **DAIKIN.TCF.015** ir patvirtinta **KEMA** pagal **pažymėjimą 74736-KRQ/EMC97-4957**.
23 **Piezīmes** * kā noteikts tehniskajā dokumentācijā **DAIKIN.TCF.015**, atbilstoši **KEMA** pozitīvajam lēmumam ko apliecina **sertifikāts 74736-KRQ/EMC97-4957**.
24 **Poznámka** * ako je to stanovené v Súbore technickej konštrukcie **DAIKIN.TCF.015** a kladne posúdené **KEMA** podľa **Certifikátu 74736-KRQ/EMC97-4957**.
25 **Not** * **DAIKIN.TCF.015** Teknik Yapı Dosyasında belirtildiği gibi ve **74736-KRQ/EMC97-4957 sertifikasına** göre **KEMA** tarafından olumlu olarak değerlendirilmiştir.

3PW21421-2C

DAIKIN

Jiro Tomita
Director Quality Assurance
Ostend, 15th of April 2006

DAIKIN EUROPE NV
Zandvoordestraat 300, B-8400 Oostende, Belgium

CONTENTS

Page

1. Safety considerations 1
2. Introduction 2
2.1. System layout 2
2.2. Combination 3
2.3. Standard supplied accessories 3
2.4. Optional accessories 3
2.5. Technical and electrical specifications 3
3. Before installation 3
3.1. Precautions for R410A 3
3.2. Installation 3
3.3. Handling 3
4. Selecting installation site 3
5. Precautions on installation 4
5.1. Installation method for prevention of falling over 5
5.2. Method for removing transportation stay 5
5.3. Method for installing drain piping 5
6. Installation servicing space 5
7. Refrigerant pipe size and allowable pipe length 6
7.1. Selection of piping material 6
8. Precautions on refrigerant piping 6
8.1. Cautions for brazing 7
8.2. Cautions for flare connection 7
9. Refrigerant piping 7
9.1. Preventing foreign objects from entering 8
9.2. Cautions for handling stop valve 8
9.3. How to use the stop valve 8
9.4. Cautions for handling the valve cover 8
9.5. Cautions for handling service port 8
9.6. Precautions when connecting field piping and regarding insulation 9
9.7. Example of connection 10
9.8. Leak test and vacuum drying 11
9.9. Additional refrigerant charge 11
9.10. Important information regarding the refrigerant used 12
9.11. 3 procedures for adding refrigerant 12
10. Electrical wiring work 14
10.1. Internal wiring – Parts table 14
10.2. Precautions on electrical wiring work 15
10.3. Connection example of total system wiring 15
10.4. Connecting power wire and transmission wires 15
11. Before operation 17
11.1. Service precautions 17
11.2. Checks before initial start-up 17
11.3. Field setting 18
11.4. Test operation 19
11.5. Temperature adjustment operation confirmation 20
12. Service mode operation 21
13. Caution for refrigerant leaks 21
13.1. Introduction 21
13.2. Maximum concentration level 21
13.3. Procedure for checking maximum concentration 21
14. Disposal requirements 22

READ THESE INSTRUCTIONS CAREFULLY BEFORE INSTALLATION. KEEP THIS MANUAL IN A HANDY PLACE FOR FUTURE REFERENCE.

IMPROPER INSTALLATION OR ATTACHMENT OF EQUIPMENT OR ACCESSORIES COULD RESULT IN ELECTRIC SHOCK, SHORT-CIRCUIT, LEAKS, FIRE OR OTHER DAMAGE TO THE EQUIPMENT. BE SURE ONLY TO USE ACCESSORIES MADE BY DAIKIN WHICH ARE SPECIFICALLY DESIGNED FOR USE WITH THE EQUIPMENT AND HAVE THEM INSTALLED BY A PROFESSIONAL.

DAIKIN EQUIPMENT IS DESIGNED FOR COMFORT APPLICATIONS. FOR USE IN OTHER APPLICATIONS, PLEASE CONTACT YOUR LOCAL DAIKIN DEALER.

IF UNSURE OF INSTALLATION PROCEDURES OR USE, ALWAYS CONTACT YOUR DEALER FOR ADVICE AND INFORMATION.

1. SAFETY CONSIDERATIONS

The precautions listed here are divided into the following two types. Both cover very important topics, so be sure to follow them carefully.

WARNING
If the warning is not observed, it may cause serious casualties.

CAUTION
If the caution is not observed, it may cause injury or damage to the equipment.

Warning

- Ask your dealer or qualified personnel to carry out installation work. Do not install the machine by yourself.
  Improper installation may result in water leakage, electric shocks or fire.
- Perform installation work in accordance with this installation manual.
  Improper installation may lead to water leakage, electric shocks or fire.
- When a unit is installed in a small room, it is necessary to take measures so that the leaked refrigerant amount does not exceed the limit even if it leaks. As for the measures to prevent the leak from not exceeding the limit, please consult with your distributor.
  If the leaked amount exceeds the limit, it may cause an oxygen deficiency accident.
- Be sure to use only the specified accessories and parts for installation work.
  Failure to use the specified parts may result in water leakage, electric shocks, fire, or the unit falling.
- Install the air conditioner on a foundation that can withstand its weight.
  Insufficient strength may result in the fall of equipment and causing injury.
- Carry out the specified installation work in consideration of strong winds, typhoons, or earthquakes.
  Improper installation work may result in accidents due to fall of equipment.
- Make certain that all electrical work is carried out by qualified personnel according to the local laws and regulations and this installation manual, using a separate circuit.
  Insufficient capacity of the power supply circuit or improper electrical construction may lead to electric shocks or fire.

- Make sure that all wiring is secure, using the specified wires and ensuring that external forces do not act on the terminal connections or wires.
  Incomplete connection or fixing may cause a fire.
- When wiring between the BP units and outdoor units, and wiring the power supply, form the wires so that the frontside panel can be securely fastened.
  If the frontside panel is not in place, the terminals may overheat, electric shocks or a fire may be caused.
- If refrigerant gas leaks during installation work, ventilate the area immediately.
  Toxic gas may be produced if refrigerant gas comes into contact with fire.
- After completing the installation work, check to make sure that there is no leakage of refrigerant gas.
  Toxic gas may be produced if refrigerant gas leaks into the room and comes into contact with a source of fire, such as a fan heater, stove or cooker.
- Before touching electric terminal parts, turn off power switch.

Caution

- Ground the air conditioner.
  Grounding resistance should be according to national regulations
  Do not connect the earth wire to gas or water pipes, lightning conductor or telephone earth wire.
  Incomplete grounding may cause electric shocks.

  - Gas pipe.
    Ignition or explosion may occur if the gas leaks.
  - Water pipe.
    Hard vinyl tubes are not effective grounds.
  - Lightning conductor or telephone ground wire.
    Electric potential may rise abnormally if struck by a lightning bolt.
- Be sure to install an earth leakage breaker.
  Failure to install an earth leakage breaker may cause electric shocks and fire.
- Install drain piping according to this installation manual to ensure good drainage, and insulate the pipe to prevent condensation.
  Improper drain piping may cause water leakage, and make the furniture get wet.
- Install the indoor units, BP units and outdoor units, power wire and connecting wire at least 1 meter away from televisions or radios to prevent image interference or noise.
  (Depending on the radio waves, a distance of 1 meter may not be sufficient to eliminate the noise.)
- Do not rinse the outdoor unit.
  This may cause electric shocks or fire.
- Do not install the air conditioner in places such as the following:
  - Where there is mist of mineral oil, oil spray or vapour for example a kitchen.
    Plastic parts may deteriorate, and cause them to fall out or water to leak.
  - Where corrosive gas, such as sulfurous acid gas, is produced.
    Corrosion of copper pipes or soldered parts may cause the refrigerant to leak.
  - Where there is machinery which emits electromagnetic waves.
    Electromagnetic waves may disturb the control system, and cause malfunction of the equipment.
  - Where flammable gases may leak, where carbon fiber or ignitable dust is suspended in the air or where volatile flammables, such as thinner or gasoline, are handled.
    Such gases may cause a fire.
  - Where the air contains high levels of salt such as that near the ocean.
  - Where voltage fluctuates a lot, such as that in factories.
  - In vehicles or vessels.
  - Where acidic or alkaline vapour is present.
- Do not allow a child to mount on the outdoor unit or avoid placing any object on the unit.
  Falling or tumbling may result in injury.
- Do not touch any refrigerant which has leaked out of refrigerant piping connections.
  This may result in frostbite.

2. INTRODUCTION

2.1. System layout (See figure 8)

1	BP unit (branch provider) Choose the BP unit type (2 or 3 rooms) in function of the installation pattern. ■ For 2 rooms: BPMKS967B2B ■ For 3 rooms: BPMKS967B3B
2	Refnet joint KHRQ22M20T (Must be purchased separately).
3	Main piping
4	Branch piping
——	Power supply line (3 wires) → (1~ 50 Hz, 230 V)
-·-·-	Transmission and power supply line (4 wires)
– – –	Transmission line (2 wires)
●	Brazing connection
□	Flare connection

Note down the installation location of each device in the provided space on figure 8. Example: kitchen, children's room, ...

Also fill in this information on the label attached to the backside of the front panel.

This information will be useful when performing test operation.

2.2. Combination

The indoor units can be installed in the following range.

- Always use appropriate indoor units compatible with R410A.
  To learn which models of indoor units are compatible with R410A, refer to the product catalogs.
- Total capacity/quantity of indoor units

Outdoor unit	Total capacity of indoor units	Total number of indoor units
RMXS112	50~145.5	6
RMXS140	70~182	8
RMXS160	80~208	9

2.3. Standard supplied accessories

Gas line piping (1) + copper gasket	1	
Gas line piping (2)	1	
Gas line piping (3)	1	
Installation manual	1	
Drain socket	1	
Drain cap	2	
Drain receiver	3	
Insulation tape	1	

Location of accessories: refer to figure 1.

1 Accessories

2.4. Optional accessories

To install the above outdoor units, the following optional parts are also required.

- Refrigerant branching kit (for R410A only: Always use an appropriate kit dedicated for your system.)

Refnet joint
KHRQ22M20T

2.5. Technical and electrical specifications

Refer to the Engineering Data Book for the complete list of specifications.

3. Before installation

Since design pressure is 4.0 MPa or 40 bar, pipes of larger wall thickness may be required. Refer to paragraph "7.1. Selection of piping material" on page 6.

3.1. Precautions for R410A

- The refrigerant requires strict cautions for keeping the system clean, dry and tight.
  - Clean and dry
  Foreign materials (including mineral oils or moisture) should be prevented from getting mixed into the system.
  - Tight
  Read "8. Precautions on refrigerant piping" on page 6 carefully and follow these procedures correctly.
- Since R410A is a mixed refrigerant, the required additional refrigerant must be charged in its liquid state. (If the refrigerant is in state of gas, its composition changes and the system will not work properly).
- The connected indoor units must be indoor units designed exclusively for R410A.

3.2. Installation

- For installation of the indoor unit(s) and BP unit(s), refer to the indoor unit and BP unit's installation manual.
- Never operate the air conditioner with the discharge pipe thermistor (R2T), suction pipe thermistor (R3T) and pressure sensors (S1NPH, S1NPL) removed. Such operation may burn out the compressor.
- Be sure to confirm the model name and the serial no. of the outer (front) plates when attaching/detaching the plates to avoid mistakes.
- When closing the service panels, take care that the tightening torque does not exceed 4.1 N•m.

3.3. Handling

As shown in the figure, bring the unit slowly by grabbing the left and right grips.

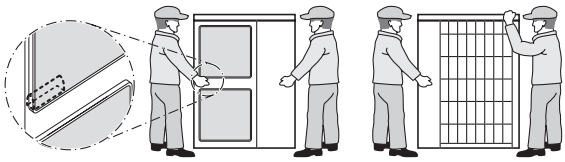

Place your hands on the corner instead of holding the suction inlet in the side of the casing, otherwise the casing could be deformed.

Take care not to let hands or objects come in contact with rear fins.

4. Selecting installation site

- Make sure to provide for adequate measures in order to prevent that the outdoor unit be used as a shelter by small animals.
- Small animals making contact with electrical parts can cause malfunctions, smoke or fire. Please instruct the customer to keep the area around the unit clean.

1 Select an installation site where the following conditions are satisfied and that meets with your customer's approval.
- Places which are well-ventilated.
- Places where the unit does not bother next-door neighbours.
- Safe places which can withstand the unit's weight and vibration and where the unit can be installed level.
- Places where there is no possibility of flammable gas or product leak.
- Places where servicing space can be well ensured.
- Places where lengths of piping and wiring for indoor units, BP units and outdoor units are within the allowable ranges.
- Places where water leaking from the unit cannot cause damage to the location (e.g. in case of a blocked drain pipe).
- Places where the rain can be avoided as much as possible.

2 When installing the unit in a place exposed to strong wind, pay special attention to the following.

Strong winds of 5 m/sec or more blowing against the outdoor unit's air outlet causes short circuit (suction of discharge air), and this may have the following consequences:
- Deterioration of the operational capacity.
- Frequent frost acceleration in heating operation.
- Disruption of operation due to rise of high pressure.
- When a strong wind blows continuously on the face of the unit, the fan can start rotating very fast until it breaks.

Refer to the figures for installation of this unit in a place where the wind direction can be foreseen.

■ Turn the air outlet side toward the building's wall, fence or screen.

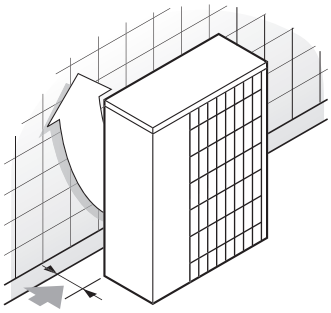

➡ Make sure there is enough room to do the installation

■ Set the outlet side at a right angle to the direction of the wind.

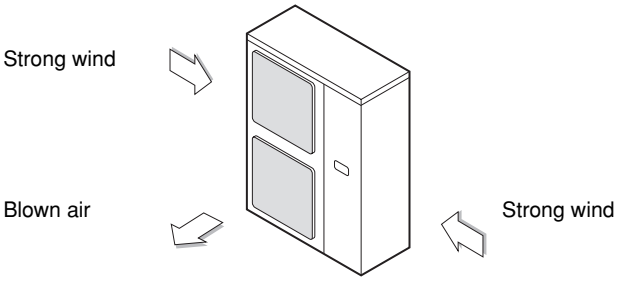

3 Prepare a water drainage channel around the foundation, to drain waste water from around the unit.

4 If the water drainage of the unit is not easy, please build up the unit on a foundation of concrete blocks, etc. (the height of the foundation should be maximum 150 mm).

5 If you install the unit on a frame, please install a waterproof plate within 150 mm of the underside of the unit in order to prevent the invasion of water from the lower direction.

6 When installing the unit in a place frequently exposed to snow, pay special attention to the following:
- Elevate the foundation as high as possible.
- Construct a large canopy (field supply).
- Remove the rear suction grille to prevent snow from accumulating on the rear fins.

7 The outdoor unit may short circuit depending on its environment, so use the louvers (field supply).

8 If you install the unit on a building frame, please install a waterproof plate (within 150 mm of the underside of the unit) or use a drain plug kit (option) in order to avoid the drain water dripping.

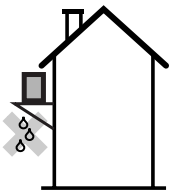

The equipment described in this manual may cause electronic noise generated from radio-frequency energy. The equipment complies to specifications that are designed to provide reasonable protection against such interference. However, there is no guarantee that interference will not occur in a particular installation.

It is therefore recommended to install the equipment and electric wires keeping proper distances away from stereo equipment, personal computers, etc... (See figure 2)

1 Personal computer or radio
2 Fuse
3 Earth leakage breaker
4 Remote controller
5 Cool/heat selector
6 Indoor unit
7 BP unit

In extreme circumstances you should keep distances of 3 m or more and use conduit tubes for power and transmission lines.

5. Precautions on installation

■ Check the strength and level of the installation ground so that the unit will not cause any operating vibration or noise after installation.

■ In accordance with the foundation drawing in the figure, fix the unit securely by means of the foundation bolts. (Prepare 4 sets of M12 foundation bolts, nuts and washers each which are available on the market.)

■ It is best to screw in the foundation bolts until their length are 20 mm from the foundation surface.

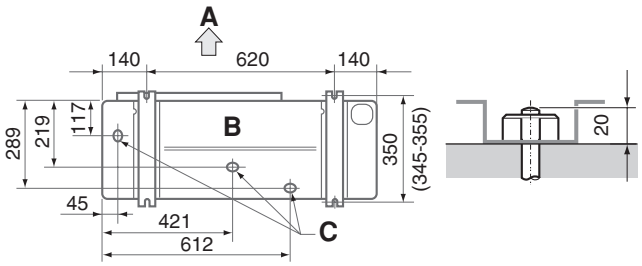

A Discharge side
B Bottom view (mm)
C Drain hole

5.1. Installation method for prevention of falling over

If it is necessary to prevent the unit from falling over, install as shown in the figure.

- prepare all 4 wires as indicated in the drawing
- unscrew the top plate at the 4 locations indicated A and B
- put the screws through the nooses and screw them back tight

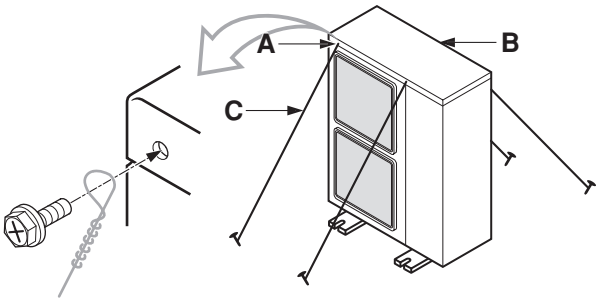

A	Location of the 2 fixation holes on the front side of the unit
B	Location of the 2 fixation holes on the rear side of the unit
C	Wires: field supply

5.2. Method for removing transportation stay

The yellow transportation stay installed over the compressor leg for protecting the unit during transport must be removed. Proceed as shown in figure 3 and described below.

A	Compressor
B	Fixing nut
C	Transportation stay

1 Slightly loosen each fixing nut (B).

2 Remove the transportation stay (C) as shown in figure 3.

3 Tighten the fixing nut (B) again.

CAUTION

If the unit is operated with the transportation stay attached, abnormal vibration or noise may be generated.

5.3. Method for installing drain piping

Depending on installation site, it may be required to install drain plug for drainage (supplied with the unit).

In cold areas, do not use a drain hose with the outdoor unit. Otherwise, drain water may freeze, impairing the heating performance.

1 See figure 12 for installation of the drain plug.

A	Drain socket
B	Drain cap
C	Drain receiver
D	Insulation tape

2 Connect a field supplied vinyl hose (internal diameter of 25 mm) to the drain socket (A).

If the hose is too long and hangs down, fix it carefully to prevent kinks.

NOTE If drain holes of the outdoor unit are covered by a mounting base or by floor surface, raise the unit in order to provide a free space of more than 100 mm under the outdoor unit. (See figure 12)

6. Installation servicing space

- The connection piping outlet direction in the installation shown in figure 4 is frontward or downward. The unit of numeric values is mm.
- When routing the piping backward, secure space of ≥250 mm on the right side of the unit.

(A) In case of non-stacked installation (See figure 4)

	Suction side obstacle	**1**	In these cases, close the bottom of the installation frame to prevent the discharged air from being bypassed
	Discharge side obstacle		
	Left side obstacle	**2**	In these cases, only 2 units can be installed.
	Right side obstacle	**3**	In these cases, no restriction of height L1.
	Top side obstacle		This situation is not allowed
✓	Obstacle is present		

(B) In case of stacked installation

1. In case obstacles exist in front of the outlet side.

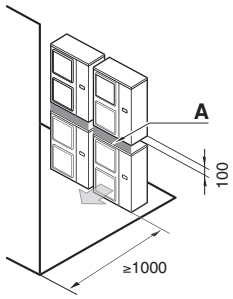

2. In case obstacles exist in front of the air inlet.

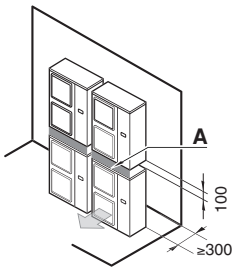

NOTE

- Do not stack more than one unit.
- About 100 mm is required as the dimension for laying the upper outdoor unit's drain pipe.
- Get the portion A sealed so that air from the outlet does not bypass.

(C) In case of multiple-row installation (for roof top use, etc.)

1. In case of installing one unit per row.

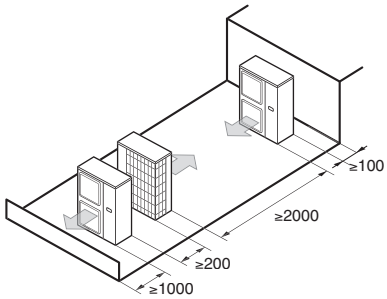

2. In case of installing multiple units (2 units or more) in lateral connection per row.

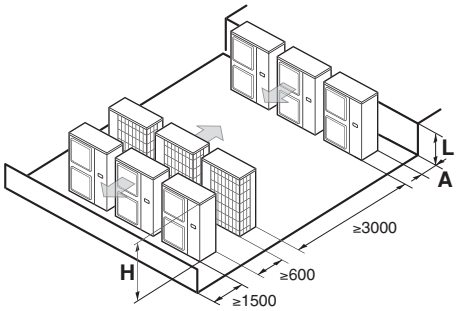

Relation of dimensions between H, A and L is shown in the table below.

	L	A
L≤H	0<L≤1/2H	250
	1/2H<L≤H	300
H<L	Installation impossible	

7. Refrigerant pipe size and allowable pipe length

All field piping must be installed by a licensed refrigeration technician and must comply with relevant local and national regulations.

To persons in charge of piping work:

- Be sure to open the stop valve after piping installing and vacuuming is complete. (Running the system with the valve closed may break the compressor.)
- It is forbidden to discharge refrigerant into the atmosphere. Collect the refrigerant in accordance with the freon collection and destruction law.
- Do not use flux when brazing the refrigerant piping.
  For brazing, use phosphor copper brazing filler metal (BCuP) which does not require a flux.
  (If a chlorine flux is used, the piping will corrode, and if the flux contains fluoride, it will cause the coolant oil to deteriorate, adversely affecting the coolant piping system.

7.1. Selection of piping material

- Foreign materials inside pipes (including oils for fabrication) must be ≤30 mg/10 m.
- Construction material: phosphoric acid deoxidized seamless copper for refrigerant.
- Temper grade: use piping with temper grade in function of the pipe diameter as listed in table below.
- The pipe thickness of the refrigerant piping should comply with relevant local and national regulations. The minimal pipe thickness for R410A piping must be in accordance with the table below.

Pipe Ø	Temper grade of piping material	Minimal thickness t (mm)
6.4 / 9.5 / 12.7	O	0.80
15.9	O	1
19.1	1/2H	1

O = Annealed
1/2H = Half hard

- Make sure to use the particular branches of piping that have been selected.
- In case the required pipe sizes (inch sizes) are not available, it is also allowed to use other diameters (mm sizes), taken the following into account:
  - select the pipe size nearest to the required size.
  - use the suitable adapters for the change-over from inch to mm pipes (field supply).

8. Precautions on refrigerant piping

- Do not allow anything other than the designated refrigerant to get mixed into the freezing cycle, such as air, etc. If any refrigerant gas leaks while working on the unit, ventilate the room thoroughly right away.
- Use R410A only when adding refrigerant
  Installation tools:
  Make sure to use installation tools (gauge manifold charge hose, etc.) that are exclusively used for R410A installations to withstand the pressure and to prevent foreign materials (e.g. mineral oils and moisture) from mixing into the system.
  Vacuum pump:
  Use a 2-stage vacuum pump with a non-return valve
  Make sure the pump oil does not flow oppositely into the system while the pump is not working.
  Use a vacuum pump which can evacuate to –100.7 kPa (5 Torr, –755 mm Hg).
- In order to prevent dirt, liquid or dust from entering the piping, cure the piping with a pinch or taping.

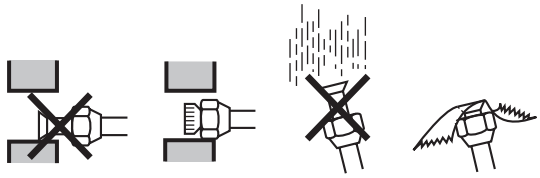

	Installation period	Protection method
	More than a month	Pinch the pipe
	Less than a month	Pinch or tape the pipe
	Regardless of the period	

Great caution is needed when passing copper tubes through walls.

- For handling of stop valves, refer to "9.3. How to use the stop valve" on page 8.
- Only use the flare nuts included with the unit. Using different flare nuts may cause the refrigerant to leak.
- Always use the supplied copper gasket when connecting the gas pipe supplied with the unit. See "9. Refrigerant piping" on page 7.

8.1. Cautions for brazing

- Be sure to carry out a nitrogen blow when brazing.
  Brazing without carrying out nitrogen replacement or releasing nitrogen into the piping will create large quantities of oxidized film on the inside of the pipes, adversely affecting valves and compressors in the refrigerating system and preventing normal operation.
- When brazing while inserting nitrogen into the piping, nitrogen must be set to 0.02 MPa with a pressure-reducing valve (=just enough so that it can be felt on the skin).

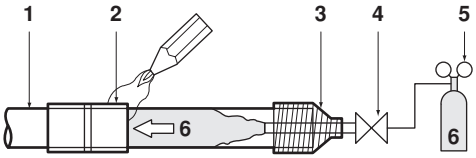

1	Refrigerant piping
2	Part to be brazed
3	Taping
4	Hands valve
5	Pressure-reducing valve
6	Nitrogen

8.2. Cautions for flare connection

- See the following table for flare part machining dimensions.
- When connecting the flare nuts, apply refrigerant ether or ester oil to the inside and outside of the flares and turn them three or four times at first.

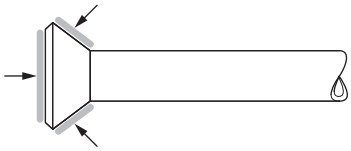

- When loosening a flare nut, always use two wrenches in combination. When connecting the piping, always use a spanner and torque wrench in combination to tighten the flare nut.

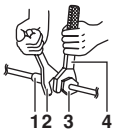

1	Piping union
2	Spanner
3	Flare nut
4	Torque wrench

- See the following table for tightening torque.
  (Applying too much torque may cause the flares to crack.)

Pipe size	Tightening torque (N•m)	A (mm)	Flare shape
Ø9.5	32.7~39.9	12.8~13.2	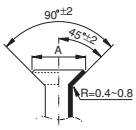
Ø15.9	61.8~75.4	19.3~19.7	
Ø19.1	97.2~118.6	12.3~23.7	

- After all the piping has been connected, use nitrogen to perform a gas leak check.

NOTE

You must use a torque wrench but if you are obliged to install the unit without a torque wrench, you may follow the installation method mentioned below.

After the work is finished, make sure to check that there is no gas leak.

When you keep on tightening the flare nut with a spanner, there is a point where the tightening torque suddenly increases. From that position, further tighten the flare nut within the angle shown below:

Pipe size	Further tightening angle	Recommended arm length of tool
Ø9.5 (3/8")	60~90°	±200 mm
Ø15.9 (5/8")	30~60°	±300 mm
Ø19.1 (5/8")	20~35°	±450 mm

9. Refrigerant piping

- Field pipes can be installed in four directions.

Figure - Field pipes in four directions (See figure 5)

A	Forward
B	Backward
C	Sideways
D	Downward
1	Drill
2	Center area around knockout hole
3	Knockout hole
4	Slit
5	Connecting pipe liquid (field supply)
6	Bottom frame
7	Front plate
8	Pipe outlet plate
9	Screw front plate
10	Pipe outlet plate screw
11	Gas line piping + copper gasket supplied with the unit (1) (make sure to always use the copper gasket).

When connecting the piping in the lateral direction (on the rear), remove the piping cover (rear) in reference to figure 7.

1	Piping cover (rear)

- To install the connecting pipe to the unit in a downward direction, make a knockout hole by penetrating the center area around the knockout hole using a Ø6 mm drill. (See figure 5).
- Cutting out the two slits makes it possible to install as shown in figure 5.
  (Use a metal saw to cut out the slits.)
- After knocking out the knock-out, it is recommended to apply repair paint to the edge and the surrounding end surfaces to prevent rusting.

The size of the gas side stop valve is Ø15.9 while the inter-unit piping is Ø19.1. Use the standard supplied accessory piping to make the connection. See figure 15.

A	Front connection
B	Rear connection
C	Side connection
D	Bottom connection
1	Gas line piping + copper gasket supplied with the unit (make sure to always use the copper gasket).
2	Gas line piping supplied with the unit
3	Gas piping (field supply)
4	Cut to the appropriate length.
5	Gas line piping supplied with the unit

9.1. Preventing foreign objects from entering

Plug the pipe through-holes with putty or insulating material (field supply) to stop up all gaps, as shown in the figure.

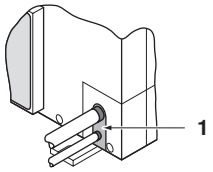

1 Putty or insulating material (field supply)

Insects or small animals entering the outdoor unit may cause a short circuit in the electrical box.

9.2. Cautions for handling stop valve

- The stop valves for BP unit-outdoor connecting piping are closed at shipment from the factory.

Make sure to keep the valve open during operation.

The names of parts of the stop valve are shown in the figure.

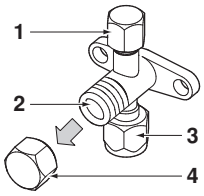

1 Service port
2 Shut-off valve
3 Field piping connection
4 Valve cover

- Since the side boards may be deformed if only a torque wrench is used when loosening or tightening flare nuts, always lock the stop valve with a wrench and then use a torque wrench.
  Do not place wrenches on the valve cover.

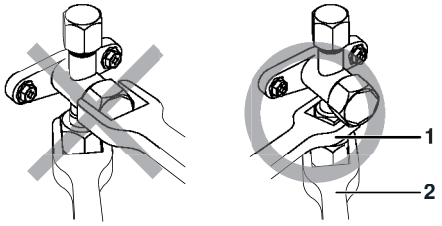

1 Spanner
2 Torque wrench

Do not apply force on the valve cover, this may result in a refrigerant leak.

- For cooling operation under low ambient temperature or any other operation under low pressure, apply silicon pad or similar to prevent freezing of the gas stop valve flare nut (see figure). Freezing of the flare nut may cause refrigerant leak.

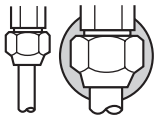

Silicon sealing pad
(Make sure there is no gap)

9.3. How to use the stop valve

Use hexagonal wrenches 4 mm and 6 mm.

- Opening the valve

1. Place the hex wrench on the valve bar and turn counter-clockwise.
2. Stop when the valve bar no longer turns. It is now open.

- Closing the valve

1. Place the hex wrench on the valve bar and turn clockwise.
2. Stop when the valve bar no longer turns. It is now closed.

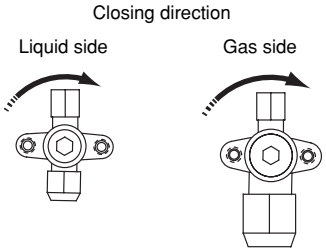

9.4. Cautions for handling the valve cover

- The valve cover is sealed where indicated by the arrow.
  Take care not to damage it.
- After operating the valve, be sure to tighten the valve cover properly.

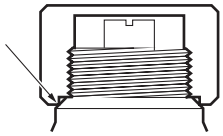

	Tightening torque
Liquid pipe	13.5~16.5 N•m
Gas pipe	22.5~27.5 N•m

- Check for refrigerant leakage after tightening the cap.

9.5. Cautions for handling service port

After the work, tighten the valve cover in place.

Tightening torque: 11.5~13.9 N•m

9.6. Precautions when connecting field piping and regarding insulation

- Be careful not to let the BP unit and outdoor branch piping come into contact with the compressor terminal cover.
  If the liquid-side piping insulation might come into contact with it, adjust the height as shown in the figure below. Also, make sure the field piping does not touch the bolts or outer panels of the compressor.
- When the outdoor unit is installed above the BP unit and indoor unit the following can occur:
  The condensated water on the stop valve can move to the BP unit. To avoid this, please cover the stop valve with sealing material.
- If the temperature is higher than 30°C and the humidity is higher than RH 80%, then the thickness of the sealing materials should be at least 20 mm in order to avoid condensation on the surface of the sealing.
- Be sure to insulate the liquid and gas-side field piping and the refrigerant branch kit.

Any exposed piping may cause condensation or burns if touched.

(The highest temperature that the gas-side piping can reach is around 120°C, so be sure to use insulating material which is very resistant.)

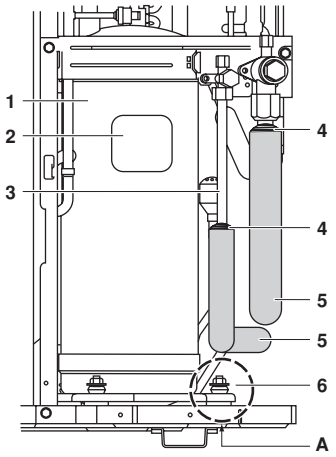

1	Compressor
2	Terminal cover
3	BP unit and outdoor field piping
4	Corking, etc.
5	Insulation material (field supply)
6	Bolts
7	Be careful with pipe, bolt and outer panel connections

9.7. Example of connection

Example of connection
(Connection of 8 units heat pump system)

1 indoor unit

A refrigerant branch kit (refnet joint)

BP 1 BP unit

NOTE The refrigerant branch kits must be positioned as close to the BP units as possible (c, d, e must be as short as possible).

Branch with refnet joint

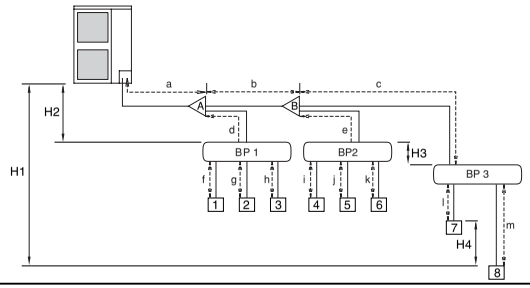

Maximum allowable length	Between outdoor and BP units	Total pipe length	Pipe length between outdoor and BP units ≤55 m
			[Example] 3 BP units: a+b+c+d+e≤55 m
	Between BP and indoor units	Total pipe length	Piping length between BP and indoor units: RMXS112≤60 m, RMXS140≤80 m, RMXS160≤90 m
			[Example] RMXS140: f+g+h+i+j+k+l+m≤80 m
	Between BP and an indoor unit	1 room length	Pipe length between BP and an indoor unit: ≤15 m
			[Example] f, g, h, i, j, k, l, m≤15 m
Minimum allowable length(*)	Between outdoor unit and the first refrigerant branch kit	Pipe length	Pipe length between outdoor unit and first refrigerant branch kit: ≥5 m
			[Example] a≥5 m
Allowable height	Between outdoor and indoor units	Difference in height	Difference in height between outdoor and indoor units (H1)≤30 m
	Between outdoor and BP units	Difference in height	Difference in height between outdoor and BP units (H2)≤30 m
	Between BP and BP units	Difference in height	Difference in height between BP and BP units (H3)≤15 m
	Between indoor and indoor units	Difference in height	Difference in height between indoor and indoor units (H4)≤15 m
Allowable length after the branch		Pipe length	Pipe length from first refrigerant branch kit (refnet joint) to indoor unit ≤40 m
			[Example] unit 8: b+c+m≤40 m [Example] unit 6: b+e+k≤40 m [Example] unit 3: d+h≤40 m
Refrigerant branch kit selection Refrigerant branch kits can only be used with R410A.			Use the following refnet joint: KHRQ22M20T.

(*) The refrigerant sound from the outdoor unit can be transmitted.

Pipe size selection

	Symbol	Piping size (outer diameter x minimum thickness)	
		Gas pipe	Liquid pipe
Between outdoor and first refrigerant branch kit	a	Ø19.1x1.0	Ø9.5x0.8
Between refrigerant branch kit and refrigerant branch kit	b	Ø15.9x1.0	
Between refrigerant branch kit and BP unit	c, d, e	**Total indoor capacity Q**	
		Gas pipe	**Liquid pipe**
	Qc, Qd, Qe ≤5.0 kW	Ø12.7x0.8	Ø6.4x0.8
	Qc, Qd, Qe >5.0 kW	Ø15.9x1.0	Ø9.5x0.8

NOTE
- Qc, Qd, Qe is total connected indoor capacity.
- c, d, e indicates the symbols in the figure.

Example

Indoor 4: 2.5 kW
Indoor 5: 3.5 kW
Indoor 6: 5.0 kW
} Qe=11.0 kW

➡ (Gas pipe) Ø15.9x1.0 and (liquid pipe) Ø9.5x0.8

How to calculate the additional refrigerant to be charged
Additional refrigerant to be charged R (kg)
R should be rounded off in units of 0.1 kg

$$R = \left(\text{Total length (m) of liquid piping size at Ø9.5}\right) \times 0.054 + \left(\text{Total length (m) of liquid piping size at Ø6.4}\right) \times 0.022$$

Example for refrigerant branch using refnet joint

a: Ø9.5x10 m	d: Ø9.5x10 m	g: Ø6.4x10 m	j: Ø6.4x10 m	m: Ø6.4x8 m
b: Ø9.5x10 m	e: Ø9.5x10 m	h: Ø6.4x10 m	k: Ø6.4x5 m	
c: Ø6.4x10 m	f: Ø6.4x10 m	i: Ø6.4x10 m	l: Ø6.4x5 m	

R=[40 x 0.054] + [78 x 0.022] = 3.876 ⇒ 3.9 kg

9.8. Leak test and vacuum drying

The units were checked for leaks by the manufacturer.

See figure 6 and refer to "Additional refrigerant charge" on page 11 for nomenclature of the parts in figure 6.

- Confirm that the gas and liquid line stop valves are firmly closed before pressure test or vacuuming.
- Make sure that valve A is completely open.

Air tight test and vacuum drying

- Air tight test: Make sure to use nitrogen gas. (For the service port position, refer to "9.2. Cautions for handling stop valve" on page 8.
- Pressurize the liquid and gas pipes to 4.0 MPa (40 bar) (do not pressurize more than 4.0 MPa (40 bar)). If the pressure does not drop within 24 hours, the system passes the test. If the pressure drops, check where the nitrogen leaks from.
- Vacuum drying: Use a vacuum pump which can evacuate to –100.7 kPa (5 Torr, –755 mm Hg)

1. Evacuate the system from the liquid and gas pipes by using a vacuum pump for more than 2 hours and bring the system to –100.7 kPa. After keeping the system under that condition for more than 1 hour, check if the vacuum gauge rises or not. If it rises, the system may either contain moisture inside or have leaks.
2. Following should be executed if there is a possibility of moisture remaining inside the pipe (if piping work is carried out during the raining season or over a long period of time, rainwater may enter the pipe during work).
   After evacuating the system for 2 hours, pressurize the system to 0.05 MPa (vacuum break) with nitrogen gas and evacuate the system again using the vacuum pump for 1 hour to –100.7 kPa (vacuum drying). If the system cannot be evacuated to –100.7 kPa within 2 hours, repeat the operation of vacuum break and vacuum drying.
   Then, after leaving the system in vacuum for 1 hour, confirm that the vacuum gauge does not rise.

9.9. Additional refrigerant charge

- Refrigerant cannot be charged until field wiring has been completed.
- Refrigerant may only be charged after performing the leak test and the vacuum drying (see above).
- When charging a system, care shall be taken that its maximum permissible charge is never exceeded, in view of the danger of liquid hammer.
- Charging with an unsuitable substance may cause explosions and accidents, so always ensure that the appropriate refrigerant (R410A) is charged.
- Refrigerant containers shall be opened slowly.
- Always use protective gloves and protect your eyes when charging refrigerant.
- When performing service on the unit requiring the refrigerant system to be opened, refrigerant must be evacuated according to local regulations.
- Do not use the automatic refrigerant charging function while working on the indoor units.
  When using the automatic refrigerant charging function, the indoor units operate automatically as well as the outdoor unit.
- When the power is on, please close the front panel when leaving the unit.

See figure 6.

1	Pressure reducing valve
2	Nitrogen
3	Tank
4	Siphon system
5	Measuring instrument
6	Vacuum pump
7	Valve A
8	Gas line stop valve
9	Outdoor unit
10	Liquid line stop valve
11	Indoor unit
12	Stop valve service port
13	Charge hose
14	BP unit

To avoid compressor breakdown. Do not charge the refrigerant more than the specified amount.

- This outdoor unit is factory charged with refrigerant and depending on pipe sizes and pipe lengths some systems require additional charging of refrigerant. See "How to calculate the additional refrigerant to be charged" on page 11.
- In case re-charge is required, refer to the nameplate of the unit. The nameplate states the type of refrigerant and necessary amount.

Precautions when adding R410A

Be sure to charge the specified amount of refrigerant in liquid state to the liquid pipe.

Since this refrigerant is a mixed refrigerant, adding it in gas form may cause the refrigerant composition to change, preventing normal operation.

- Before charging, check whether the refrigerant cylinder is equipped with a siphon tube or not.

Charge the liquid refrigerant with the cylinder in upright position.

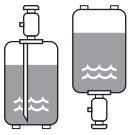

Charge the liquid refrigerant with the cylinder in up-side-down position.

9.10. Important information regarding the refrigerant used

This product contains fluorinated greenhouse gases covered by the Kyoto Protocol. Do not vent gases into the atmosphere.

Refrigerant type: R410A

GWP[(1)] value: 1975

[(1)] GWP = global warming potential

Please fill in with indelible ink,

- ① the factory refrigerant charge of the product,
- ② the additional refrigerant amount charged in the field and
- ①+② the total refrigerant charge

on the refrigerant charge label supplied with the product.

The filled out label must be adhered in the proximity of the product charging port (e.g. onto the inside of the service cover).

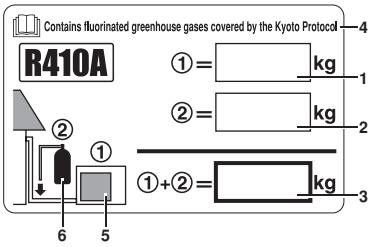

1	factory refrigerant charge of the product: see unit name plate
2	additional refrigerant amount charged in the field
3	total refrigerant charge
4	Contains fluorinated greenhouse gases covered by the Kyoto Protocol
5	outdoor unit
6	refrigerant cylinder and manifold for charging

9.11. 3 procedures for adding refrigerant

Procedure 1: Adding refrigerant by using the automatic refrigerant charging function (recommended)

How to connect the tank?

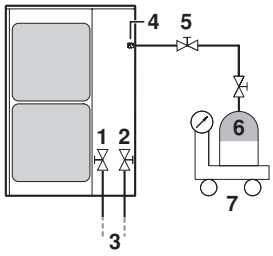

1	Liquid line stop valve
2	Gas line stop valve
3	To indoor unit
4	Service port for adding refrigerant
5	Valve A
6	R410A Tank
7	Measuring instrument

When the refrigerant tank is connected and the specified operation is performed, the appropriate amount of refrigerant will be charged into the system. After charging, the system will stop automatically. The refrigerant must be charged according to the procedure described below.

CAUTION

- Make sure to turn ON the power 6 hours before starting the operation. This is necessary to warm the crankcase by the electric heater.
- At least 30 minutes is needed for automatic charging of the refrigerant when 3 kg of additional refrigerant is being added at an outside temperature of approximately 30°C. The charging time depends on the amount of charged refrigerant and on the outside temperature.
- Automatic refrigerant charging is **NOT** possible if the following restrictions are exceeded:
  - Outside temperature: 0°C DB~43°C DB
  - Indoor temperature: 20°C DB~32°C DB
  - Indoor unit connection capacity: 50%~130%

Automatic refrigerant charging procedure

1 Open the liquid and gas side stop valves completely.

Note that valve A must be closed!

2 Turn on the power of the outdoor unit and indoor units.

NOTE When an indoor unit is connected to the refrigerant system and the indoor unit is turned off, automatic charging will fail.

3 Make sure that the led on the PCB (A1P and A2P) on the outdoor unit are as shown in the table below. This indicates that the system is operating normally.

MODE	TEST/HWL	IND	MASTER	SLAVE	L.N.O.P.	DEMAND
H1P	H2P	H3P	H4P	H5P	H6P	H7P
●	●	☼	●	●	●	●

Led state

Throughout the manual the state of the leds is indicated as follows:

●	OFF
☼	ON
◑	blinking
*	ON or OFF

If H2P is lit up, check the type of error based on the error code in the remote controller and correct the error in accordance with "11.4. Test operation" on page 19.

4 Automatically charge the refrigerant according to the procedure described below.

WARNING

Do not touch anything else than the push-buttons (BS1~5) on the PCB (A2P) when making the settings. These settings must be done with the power on

4.1 Press **BS4 TEST** once.

H1P	H2P	H3P	H4P	H5P	H6P	H7P
☼	☼	☼	☼	☼	☼	☼

4.2 Press **BS4 TEST** for 5 seconds. The unit will start running.

H1P	H2P	H3P	H4P	H5P	H6P	H7P
●	◑	●	●	●	✻	✻

If the led display below appears, the automatic refrigerant charging restriction has been exceeded. Additional refrigerant must be charged by calculating the additional refrigerant charging amount.

H1P	H2P	H3P	H4P	H5P	H6P	H7P	Description of error
☼	◑	◑	◑	☼	●	●	Inappropriate outdoor temperature

or

H1P	H2P	H3P	H4P	H5P	H6P	H7P	Description of error
☼	◑	◑	◑	●	☼	●	Inappropriate indoor temperature

If the led display below appears, check the indoor unit connection capacity.

H1P	H2P	H3P	H4P	H5P	H6P	H7P	Description of error
☼	◑	◑	◑	◑	●	☼	Inappropriate indoor unit connection capacity

If the led display below appears, the liquid and gas side stop valves may be closed.

H1P	H2P	H3P	H4P	H5P	H6P	H7P	Description of error
☼	●	✻	✻	✻	✻	✻	Stop valve is closed

NOTE

If you want to repeat the automatic refrigerant charging operation from step 4.2, fully open the liquid and gas side stop valves and press the **BS1 MODE** button once.

4.3 When the led indication becomes as shown in the table below in about 15 to 30 minutes after start of operation, open valve A at once to start charging of the refrigerant.

Immediately after starting charging of the refrigerant by opening valve A, press **BS4 TEST** once. When **BS4 TEST** is not pressed within 10 minutes after the led indication is shown, charging is stopped.

H1P	H2P	H3P	H4P	H5P	H6P	H7P	Code on remote controller
◑	◑	◑	●	☼	●	☼	PA

4.4 The led indication becomes as shown in the table below during automatic refrigerant charging.

During automatic refrigerant charging, the remote controller indicates **TEST** (test operation) and (external control).

H1P	H2P	H3P	H4P	H5P	H6P	H7P
☼	◑	✻	✻	✻	✻	✻

NOTE

If the led display below appears, the refrigerant tank is empty. Replace the refrigerant tank, open valve A and re-charge.

H1P	H2P	H3P	H4P	H5P	H6P	H7P	Code on remote controller
☼	◑	◑	●	●	☼	●	PA

The led indication becomes as shown in the table below when automatic refrigerant charging is about to end. Prepare to close the valve on the refrigerant tank.

H1P	H2P	H3P	H4P	H5P	H6P	H7P	Code on remote controller
◑	◑	◑	☼	☼	☼	☼	PE

NOTE

It is possible that the code PE is not shown on the remote controller but this does not indicate a malfunction. The led indication can immediately shift to the situation as shown in "Case 1: Charging complete" on page 13.

4.5 When the led indication becomes as shown in the table below, quickly close valve A and follow instructions as described below.

CAUTION

- When adding refrigerant is done or when pausing, close the valve on the refrigerant tank immediately.
  More refrigerant might be charged by any remaining pressure after the machine is stopped.
- The outdoor fan may keep rotating a little bit more, but this does not indicate a malfunction.

Case 1: Charging complete

H1P	H2P	H3P	H4P	H5P	H6P	H7P	Code on remote controller
☼	◑	◑	☼	☼	☼	☼	P9

Charging of the refrigerant is complete. Press **BS1 MODE** button once and go to step 5.

Case 2: Recharging operation

H1P	H2P	H3P	H4P	H5P	H6P	H7P	Code on remote controller
☼	◑	◑	●	☼	☼	☼	P8

Press **BS1 MODE** button once and perform automatic refrigerant charging again starting from Step 4.2.

Case 3: Charging interrupted

H1P	H2P	H3P	H4P	H5P	H6P	H7P	Code on remote controller
☼	◑	◑	●	●	●	☼	P2

Something is preventing normal operation:

- Is the gas side stop valve completely open?
- Are the valve on the refrigerant tank and valve A open?
  Check if the **BS4 TEST** button was pressed within 10 minutes after the valves were opened.
- Is the indoor unit air intake vent or outlet vent blocked?

After correcting the problem, press **BS1 MODE** button once and perform automatic refrigerant charging again starting from step 4.2.

Case 4: Failure

H1P	H2P	H3P	H4P	H5P	H6P	H7P	Error code on remote controller
●	☼	☼	●	●	●	●	See footnote(*)

(*) An error in the system interrupted the operation of the unit. Check the error by using the error code displayed on the remote controller. For an explanation of the error codes, see "Error codes on the remote controller" on page 20 and solve the problem.

After correcting the problem, press **BS1 MODE** button once and perform automatic refrigerant charging again starting from step 4.2.

5 When charging is complete, determine the weight of refrigerant that was added and fill in the amount in the "Additional refrigerant charge label" attached to service precautions plate on the unit.

6 After adding the refrigerant, do not forget to close the lid of the service port. The tightening torque for the lid is 11.5~13.9 N•m.

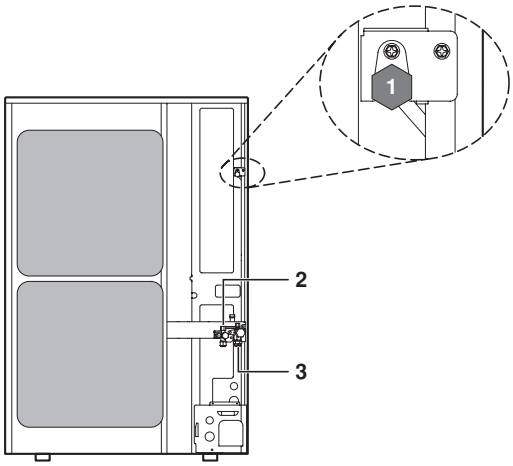

1 Service port for adding refrigerant

2 Liquid line stop valve

3 Gas line stop valve

Procedure 2: Charging while the outdoor unit is at a standstill

See figure 6.

1 Determine the weight of refrigerant to be charged additionally referring to the item "Additional refrigerant charge" in "How to calculate the additional refrigerant to be charged" on page 11 and fill in the amount in the "Additional refrigerant charge label" attached to the unit.

2 After the vacuum drying is finished, open valve A and charge the additional refrigerant in its liquid state through the liquid stop valve service port taking into account following instructions:
- Check that gas and liquid stop valves are closed.
- Stop the compressor and charge the specified weight of refrigerant.

If the total refrigerant cannot be charged while the outdoor unit is at a standstill, it is possible to charge the refrigerant by operating the outdoor unit using the refrigerant charge function (refer to "Setting mode 2" on page 19) and follow "Procedure 3: Charging while the outdoor unit is operating" on page 14.

Procedure 3: Charging while the outdoor unit is operating

See the figure in "How to connect the tank?" on page 12.

1 Close the front panel and turn on the power to all indoor units and the outdoor unit.

2 Completely open the gas side stop valve and liquid side stop valve. Valve A must be left fully closed.

3 Open valve A immediately after starting of the compressor.

4 Charge the additional refrigerant in its liquid state through the service port of the liquid line stop valve.

5 While the unit is at a standstill and under setting mode 2 (refer to "11.2. Checks before initial start-up" on page 17, "Setting the mode" on page 18), set the required function A (additional refrigerant charging operation) to **ON** (ON). Then operation starts. The blinking H2P led indicates test operation and the remote controller indicates **TEST** (test operation) and (external control).

6 When the specified amount of refrigerant is charged, push the **BS3 RETURN** button. Then operation stops.
- The operation automatically stops within 30 minutes.
- If the refrigerant charge cannot be finished within 30 minutes, repeat step 5.
- If the operation stops immediately after restart, there is a possibility that the system is overcharged.
  The refrigerant cannot be charged more than this amount.

7 After the refrigerant charge hose is removed, make sure to close valve A.

10. Electrical wiring work

- All wiring must be performed by an authorized electrician.
- All field supplied components and all electric construction should comply with the applicable local and national codes.

To persons in charge of electrical wiring work:

Do not operate the unit until the refrigerant piping is complete. (Running it before the piping is ready will break the compressor.)

10.1. Internal wiring – Parts table

A1P..... Printed circuit board (main)

A2P..... Printed circuit board (inverter)

A3P..... Printed circuit board (noise filter)

A4P..... Printed circuit board (C/H selector)

BS1~BS5..... Push button switch (mode, set, return, test, reset)

C1~C4 ..... Capacitor

DS1 ..... DIP switch

E1HC..... Crankcase heater

F1U, F4U ..... Fuse (T 6.3 A/250 V)

F6U..... Fuse (T 5.0 A/250 V)

FINTH..... Thermistor (fin)

H1P~H8P ..... Light emitting diode (service monitor orange) Prepare, test: blinking

H2P ..... Malfunction detection: light up

HAP ..... Light emitting diode (service monitor green)

HBP ..... Inverter pilot lamp

K1M ..... Magnetic contactor (M1C)

K1R ..... Magnetic relay (Y1S)

K2R ..... Magnetic relay (Y2S)

K3R ..... Magnetic relay (Y3S)

K4R ..... Magnetic relay (E1HC)

K5R ..... Magnetic relay

L1R..... Reactor

M1C..... Motor (compressor)

M1F ..... Motor (fan) (upper)

M2F ..... Motor (fan) (lower)

PS..... Switching power supply

Q1DI ..... Field earth leakage breaker (300 mA)

R1 ..... Resistor (current limiting)

R2..... Resistor (current sensor)

R1T ..... Thermistor (air)

R2T ..... Thermistor (discharge)

R3T ..... Thermistor (suction 1)

R4T ..... Thermistor (heat exchanger)

R5T ..... Thermistor (suction 2)

R6T ..... Thermistor (subcooling heat exchanger)

R7T ..... Thermistor (liquid pipe)

S1NPH ..... Pressure sensor (high)

S1NPL ..... Pressure sensor (low)

S1PH ..... Pressure switch (high)

V1R ..... Power module

V2R, V3R ..... Diode module

V1T ..... IGBT (Insulated Gate Bipolar Transistor)

X1M ..... Terminal strip (power supply)

X1M ..... Terminal strip (C/H selector) (A4P)

X2M ..... Terminal strip (control)

Y1E ..... Electronic expansion valve (main)

Y3E ..... Electronic expansion valve (subcool)

Y1S ..... Solenoid valve (4 way valve)

Y2S ..... Solenoid valve (hot gas)

Y3S ..... Solenoid valve (unload circuit)

Z1C~Z7C ..... Noise filter (ferrite core)

Z1F~Z4F ..... Noise filter

Cool/heat selector

S1S ..... Selector switch (fan/cool – heat)

S2S ..... Selector switch (cool – heat)

Connector of option adaptor

X37A ..... Connector (option adaptor power supply)

10.2. Precautions on electrical wiring work

- Before obtaining access to terminal devices, all supply circuits must be interrupted.
- Use only copper wires.
- The wiring between the indoor unit and outdoor unit must be for 230 V.
- Do not turn on the main switch until all the wiring is completed. Make sure that the main switch has a contact separation of at least 3 mm in all poles.
- Never squeeze bundled cables into a unit.
- Fix cables so that cables do not make contact with the pipes (especially on high pressure side).
- Secure the electrical wiring with clamping material as shown in figure 10 so that it does not come in contact with the piping, particularly on the high-pressure side.
  Make sure no external pressure is applied to the terminal connectors.
- When installing the earth leakage breaker make sure that it is compatible with the inverter (resistant to high frequency electrical noise) to avoid unnecessary opening of the earth leakage breaker.
- As this unit is equipped with an inverter, installing a phase advancing capacitor not only will deteriorate power factor improvement effect, but also may cause capacitor abnormal heating accident due to high-frequency waves. Therefore, never install a phase advancing capacitor.
- Follow the "electrical wiring diagram" when carrying out any electrical wiring.
- Always ground wires. (In accordance with national regulations of the pertinent country.)
- Do not connect the ground wire to gas pipes, sewage pipes, lightning rods, or telephone ground wires.
  - Combustion gas pipes: can explode or catch fire if there is a gas leak.
  - Sewage pipes: no grounding effect is possible if hard plastic piping is used.
  - Telephone ground wires and lightning rods: dangerous when struck by lightning due to abnormal rise in electrical potential in the grounding.
- This unit uses an inverter, and therefore generates noise, which will have to be reduced to avoid interfering with other devices. The outer casing of the product may take on an electrical charge due to leaked electrical current, which will have to be discharged with the grounding.

10.3. Connection example of total system wiring

(See figure 9)

1	Power
2	Earth leakage breaker
3	Branch switch overcurrent breaker (fuse)
4	Ground
5	BP unit

10.4. Connecting power wire and transmission wires

- Let the power wire (including ground wire) go through the power outlet port on either the front, side or back of the outdoor unit.
- Let the transmission wires go through the cable outlet port, pipe outlet port or knock out hole on either the front, side or back of the outdoor unit. (See figure 10).

A	Rear direction
B	Lateral direction
C	Front direction
1	Power terminal block (X1M)
2	Control wiring between units
3	Power cable with ground wire. (Keep proper distance between power cable and control wiring).
4	Clamp (field supply)
5	Stop valve mounting plate
6	Power cable
7	Ground cable (yellow/green). Make sure that the ground cable length is longer than the power cable length. This is to make sure that the ground cable is loosing last in case of pulling.
8	Fix the control wiring with the clamp
9	Control terminal block (X2M)

Precautions when knocking out knockout holes

- To punch a knock hole, hit on it with a hammer.
- After knocking out the holes, we recommend you paint the edges and areas around the edges using the repair paint to prevent rusting.
- When passing electrical wiring through the knock holes, remove any burrs from the knock holes and wrap the wiring with protective tape to prevent damage.
- If there is any possibility that small animals enter the system through the knock holes, plug the holes with packing materials (to be prepared on-site).

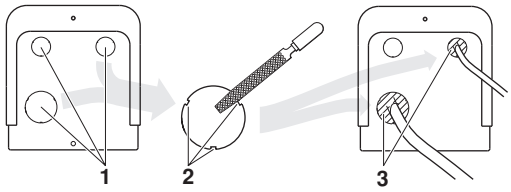

1 Knockout hole
2 Burr
3 Packing materials

- Use a power wire pipe for the power wiring.
- Outside the unit, make sure the low voltage electric wiring (i.e. for the remote control, between units, etc.) and the high voltage electric wiring do not pass near each other, keeping them at least 50 mm apart. Proximity may cause electrical interference, malfunctions, and breakage.
- Be sure to connect the power wiring to the power wiring terminal block and secure it as described under "10.4. Connecting power wire and transmission wires" on page 15.
- Inter-unit wiring should be secured as described in "10.4. Connecting power wire and transmission wires" on page 15.
  - Secure the wiring with clamps so that it does not touch the piping.
  - Make sure the wiring and the electric box lid do not stick up above the structure, and close the cover firmly.

10.5. Power circuit and cable requirements

A power circuit (see table below) must be provided for connection of the unit. This circuit must be protected with the required safety devices, i.e. a main switch, a slow blow fuse on the phase and an earth leakage breaker.

Model	Phase and frequency	Voltage	Recommended fuses	Transmission line section
RMXS112	1 N~50 Hz	230 V	32 A	0.75~1.25 mm^2
RMXS140				
RMXS160				

NOTE

- Select the power supply cable in accordance with relevant local and national regulations.
- Wire size must comply with the applicable local and national code.
- Specifications for local wiring power cord and branch wiring are in compliance with IEC60245.
- WIRE TYPE H05VV(*)
  *Only in protected pipes (use H07RN-F when protected pipes are not used).

- When installing the earth leakage breaker make sure that it is compatible with the inverter (resistant to high frequency electrical noise) to avoid unnecessary opening of the earth leakage breaker.
- In connecting the power cable to the power terminal block, securely clamp the cable as shown in figure 10.

After finishing the electric work, confirm that each electric part and terminal inside the electric parts box is connected securely.

Precautions when laying power wiring

Use round pressure terminals for connections to the power terminal block.

When none are available, follow the instructions below.

- Do not connect wiring of different thicknesses to the power terminal block. (Slack in the power wiring may cause abnormal heat.)
- When connecting wiring which is the same thickness, do as shown in the figure below.

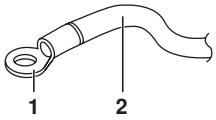

1 Round pressure terminal
2 Power wire

- For wiring, use the designated power wire and connect firmly, then secure to prevent outside pressure being exerted on the terminal board.
- Use an appropriate screwdriver for tightening the terminal screws. A screwdriver with a small head will strip the head and make proper tightening impossible.
- Over-tightening the terminal screws may break them.
- See the table below for tightening torque for the terminal screws.

Tightening torque (N•m)	
M5 (Power terminal block/ground wire)	2.39~2.92
M4 (Shielded ground)	1.18~1.44
M3.5 (Control wiring block)	0.79~0.97

Field line connection: Control wiring and cool/heat selection

If an excessive force is applied while connecting a cable to the terminal block on the PC board, the PC board may be damaged.

See figure 11.

1 Cool/heat selector
2 Outdoor unit PC board (A1P/A2P/A4P/X2M)
3 Take care of the polarity
4 Use the conductor of sheathed wire (2 wire) (no polarity)
5 Terminal board (field supply)
6 BP unit
7 Indoor unit

Setting the cool/heat operation

1 Performing cool/heat setting with the cool/heat selector.

Connect the cool/heat selector remote controller (optional) to the A/B/C terminals and set the cool/heat selector switch (DS1-1) on the outdoor unit PC board (A2P) to OUT/D UNIT. (See figure 13).

1 Cool/heat selector

NOTE When the cool/heat selector is set to heat, you cannot select cooling with the remote controller.

For low-noise operation or demand operation, it is necessary to get the optional 'External control adaptor for outdoor unit' (DTA104A61/62).

For details, see the installation manual attached to the adaptor.

- Be sure to follow the limits below. If the unit-to-unit cables are beyond these limits, it may result in malfunction of transmission.
  Maximum wiring length: 200 m
  Total wiring length: 300 m
  Maximum No. of branches: 9
- Never connect the power supply to unit-to-unit cabling terminal block. Otherwise the entire system may break down.

- The wiring from the BP units must be connected to the F1/F2 (In-Out) terminals on the PC board in the outdoor unit.
- After installing the interconnecting wires inside the unit, wrap them along with the on-site refrigerant pipes using finishing tape, as shown in figure 14.

1 Liquid pipe
2 Gas pipe
3 Interconnecting wiring
4 Insulator
5 Finishing tape

For the above wiring, always use vinyl cords with 0.75 to 1.25 mm^2 sheath or cables (2-core wires). (3-core wire cables are allowable for the cooler/heater changeover remote controller only.)

11. Before operation

11.1. Service precautions

WARNING: ELECTRIC SHOCK

Caution when performing service to inverter equipment

- Do not touch live parts for 10 minutes after the power supply is turned off because of high voltage risk.
- Additionally, measure the points as shown in the figure with a tester and confirm that the voltage of the capacitor in the main circuit is no more than 50 V DC.

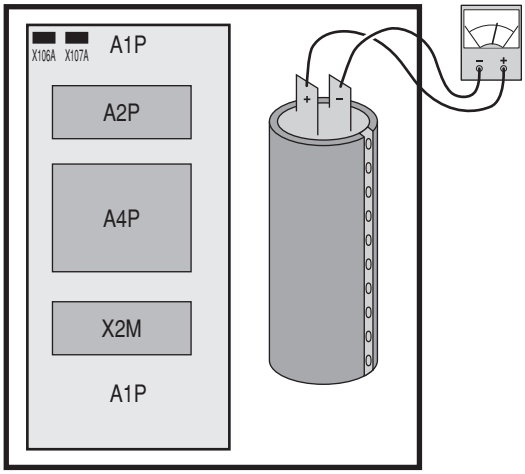

- Make sure that the power supply is turned off before performing the maintenance work. The heater of the compressor may operate even in stop mode.
- Please note that some sections of the electric component box are extremely hot.
- In order to prevent damage to the PCB, first eliminate static electricity by touching a metal part (e.g. stop valve) with your hand. Then pull out the connector.
- After measuring the residual voltage, pull out the outdoor fan connector.
- Make sure you do not touch a conductive section.
- The outdoor fan may rotate due to strong backblow wind, causing the capacitor to charge. This may result in an electric shock.

After maintenance, make sure the outdoor fan connector is connected again. Otherwise, the unit may break down.

Play it safe!

Touch a metal part by hand (such as the stop valve) in order to eliminate static electricity and to protect the PCB before performing service.

11.2. Checks before initial start-up

NOTE Note that during the first running period of the unit, required power input may be higher than stated on the nameplate of the unit. This phenomenon originates from the compressor that needs elapse of a 50 hours run in period before reaching smooth operation and stable power consumption.

- Make sure that the circuit breaker on the power supply panel of the installation is switched off.
- Attach the power wire securely.
- Introducing power with a missing N-phase or with a mistaken N-phase will break the equipment.

After the installation, check the following before switching on the circuit breaker:

1 Transportation stay

Be sure that the transportation stay is removed from the compressor.

2 The position of the switches that require an initial setting

Make sure that switches are set according to your application needs before turning the power supply on.

3 Power supply wiring and transmission wiring

Use a designated power supply and transmission wiring and make sure that it has been carried out according to the instructions described in this manual, according to the wiring diagrams and according to local and national regulations.

4 Pipe sizes and pipe insulation

Make sure that correct pipe sizes are installed and that the insulation work is properly executed.

5 Additional refrigerant charge

The amount of refrigerant to be added to the unit should be written on the included "Added Refrigerant" plate and attached to the rear side of the front cover.

6 Insulation test of the main power circuit

Using a megatester for 500 V, check that the insulation resistance of 2 MΩ or more is attained by applying a voltage of 500 V DC between power terminals and earth. Never use the megatester for the transmission wiring.

7 Stop valves

Be sure that the stop valves are open on both liquid and gas side.

8 Drain pipe installation

Make sure that the drain piping is installed properly.

11.3. Field setting

If required, carry out any field setting according to the following instructions. Refer to the service manual for more details.

Handling the switches

When carrying out field settings, operate the switches with an insulated stick (such as a ball-point pen) to avoid touching of live parts.

Location of the DIP switches, leds and buttons

1 Led H1P~H8P

2 Push button switches BS1~BS5

3 DIP switches 2 (DS1-1, DS1-2)

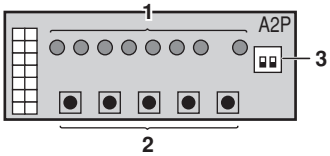

Led state

Throughout the manual the state of the leds is indicated as follows:

● OFF

☼ ON

◐ blinking

Setting the push button switch (BS1~5)

Function of the push button switch which is located on the outdoor unit PCB (A2P):

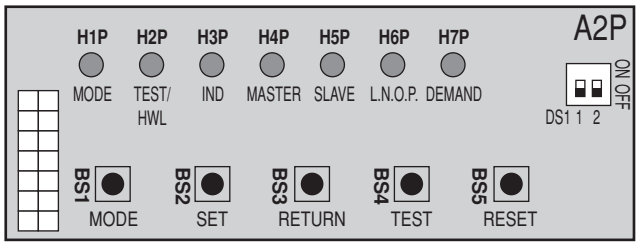

BS1 MODE	For changing the set mode
BS2 SET	For field setting
BS3 RETURN	For field setting
BS4 TEST	For test operation
BS5 RESET	For resetting the address when the wiring is changed or when an additional indoor unit is installed

The figure shows state of the led indications when the unit is shipped from the factory.

Setting the mode

The set mode can be changed with the **BS1 MODE** button according to the following procedure:

- **For setting mode 1**: Press the **BS1 MODE** button once, the led is off ●.
- **For setting mode 2**: Press the **BS1 MODE** button for 5 seconds, the H1P led is on ☼.

If the H1P led is blinking ◐ and the **BS1 MODE** button is pushed once, it will change to setting mode 1.

NOTE If you get confused in the middle of the setting process, push the **BS1 MODE** button. Then it returns to setting mode 1 (H1P led is off).

Setting mode 1

The H1P led is off (COOL/HEAT selection setting).

Setting procedure

1 Push the **BS2 SET** button and adjust the led indication to either one of the possible settings as shown below in the field marked ▒:

1 In case of COOL/HEAT setting by each individual outdoor unit circuit.

2 In case of COOL/HEAT setting by the master unit when outdoor units are connected in multiple-system combination(*).

3 In case of COOL/HEAT setting by the slave unit when outdoor units are connected in multiple-system combination(*).

	H1P	H2P	H3P	H4P	H5P	H6P	H7P
1	●	●	◐	●	●	●	●
2	●	●	●	◐	●	●	●
3	●	●	●	●	◐	●	●

(*) It is necessary to use the optional external control adapter for outdoor unit (DTA104A61/62). See the instruction delivered with the adapter.

2 Push the **BS3 RETURN** button and the setting is defined.

Setting mode 2

The H1P led is on.

Setting procedure

1 Push the **BS2 SET** button according to the required function (A~F). The led indication that matches the required function is shown below in the field marked ▭:

Possible functions

- **A** additional refrigerant charging operation.
- **B** refrigerant recovery operation/vacuuming operation.
- **C** automatic low noise operation setting at nighttime.
- **D** low noise operation level setting (**L.N.O.P**) via the external control adapter.
- **E** power consumption limitation setting (**DEMAND**) via the external control adapter.
- **F** enabling function of the low noise operation level setting (**L.N.O.P**) and/or power consumption limitation setting (**DEMAND**) via the external control adapter (DTA104A61/62).

	H1P	H2P	H3P	H4P	H5P	H6P	H7P
A	☼	●	☼	●	☼	●	●
B	☼	●	☼	●	☼	●	☼
C	☼	●	☼	●	☼	☼	●
D	☼	●	☼	☼	☼	☼	☼
E	☼	●	☼	☼	☼	☼	●
F	☼	●	●	☼	☼	●	●

2 When the **BS3 RETURN** button is pushed, it indicates the current setting.

3 Push the **BS2 SET** button according to the required setting possibility as shown below in the field marked ▭.

3.1 Possible settings for function A, B and F are **ON** (ON) or **OFF** (OFF).

	H1P	H2P	H3P	H4P	H5P	H6P	H7P
ON	☼	●	●	●	●	◐	●
OFF(*)	☼	●	●	●	●	●	◐

(*) This setting = factory setting.

3.2 Possible settings for function C

The noise of level 3< level 2< level 1 (◢ **1**).

	H1P	H2P	H3P	H4P	H5P	H6P	H7P
OFF(*)	☼	●	●	●	●	●	●
◢ 1	☼	●	●	●	●	●	◐
◢ 2	☼	●	●	●	●	◐	●
◢ 3	☼	●	●	●	●	◐	◐

(*) This setting = factory setting.

3.3 Possible settings for function D and E

For function D (**L.N.O.P**) only: the noise of level 3< level 2< level 1 (◢ **1**).

For function E (**DEMAND**) only: the power consumption of level 1< level 2 < level 3 (◢ **3**).

	H1P	H2P	H3P	H4P	H5P	H6P	H7P
◢ 1	☼	●	●	●	●	●	◐
◢ 2 (*)	☼	●	●	●	●	◐	●
◢ 3	☼	●	●	●	◐	●	◐

(*) This setting = factory setting.

4 Push the **BS3 RETURN** button and the setting is defined.

5 When the **BS3 RETURN** button is pushed again, the operation starts according to the setting.

Refer to the service manual for more details and for other settings.

NOTE When finished, please mark the settings of function C, D and E in the "Records" part of the label on the backside of the front plate.

Confirmation of the set mode

The following items can be confirmed by setting mode 1 (H1P led is off)

Check the led indication in the field marked ▭.

1 Indication of the present operation state

- ● normal
- ☼ abnormal
- ◐ under preparation or under test operation

H1P	H2P	H3P	H4P	H5P	H6P	H7P
●	●	☼	●	●	●	●

2 Indication of COOL/HEAT selection setting

- **1** When set to COOL/HEAT change-over by each individual outdoor unit circuit (= factory setting).
- **2** Indication on master unit when COOL/HEAT change-over is carried out by outdoor units connected in multiple system-combination.
- **3** Indication on slave unit when COOL/HEAT change-over is carried out by outdoor units connected in multiple system-combination

	H1P	H2P	H3P	H4P	H5P	H6P	H7P
1(*)	●	●	☼	●	●	●	●
2	●	●	●	☼	●	●	●
3	●	●	●	●	☼	●	●

(*) This setting = factory setting.

3 Indication of low noise operation state **L.N.O.P**

- ● standard operation (= factory setting)
- ☼ **L.N.O.P** operation

H1P	H2P	H3P	H4P	H5P	H6P	H7P
●	●	☼	●	●	●	●

4 Indication of power consumption limitation setting **DEMAND**

- ● standard operation (= factory setting)
- ☼ **DEMAND** operation

H1P	H2P	H3P	H4P	H5P	H6P	H7P
●	●	☼	●	●	●	●

11.4. Test operation

NOTE After turning on the power supply, the unit can not be started until the H2P initialisation led goes off (maximum 12 minutes).

- Check the stop valves
  Make sure to open the gas and liquid line stop valves.
- After installation, perform the test operation.
  Unless the test operation is performed, the error code "U3" is shown on the remote controller and the unit cannot be operated.

Performing the test operation

1 To protect the compressor, make sure to turn on the power supply 6 hours before starting operation.

2 Set to setting mode 1 (H1P led is off) (refer to "Setting mode 1" on page 18).

3 Press the **BS4 TEST** button for 5 seconds when the unit is at a standstill. The test operation starts when the H2P led blinks and the remote controller indicates **TEST** (test operation) and (external control).

It may take 10 minutes to bring the state of refrigerant uniform before the compressor starts, but that is not a malfunction.
The test operation is automatically carried out in cooling mode during 15~30 minutes.
Depending on the situation, the refrigerant running sound or the sound of a magnetic solenoid valve may rise during this operation.
The following items are automatically checked:
- Check for incorrect wiring
- Check if stop valves are open
- Check of refrigerant charge
- Automatic judgement of piping length

NOTE When you want to terminate the test operation, press the **BS3 RETURN** button. The unit will keep running for 30 seconds and then stops. During test operation it is impossible to stop the unit with the remote controller.

4 After the test operation (maximum 30 minutes), the unit automatically stops. Check the operation results by the outdoor unit led indication.

	H1P	H2P	H3P	H4P	H5P	H6P	H7P
normal	●	●	☼	●	●	●	●
abnormal	●	☼	●	●	●	●	●

- Indoor units cannot be checked individually. After the test operation is finished, check the indoor units individually via the remote controller. This is possible for Sky Air indoor units only.
- The led indication changes during this operation, but that is not abnormal.
- Please attach the front plate of the outdoor unit in order to prevent electric shocks.

5 Measure to be taken when operation finishes abnormally
1. Confirm the error code on the remote controller.
2. Correct what is abnormal.
(See the installation manual and operation manual or contact your dealer.)
3. After the abnormality is corrected, press the **BS3 RETURN** button and reset the error code.
4. Start the unit again to confirm that the problem is properly solved.
5. If no error code is indicated on the remote controller, it is possible to start operation after 5 minutes.

Error codes on the remote controller

Installation error	Malfunction code	Remedial action
The stop valve of an outdoor unit is left closed.	E3	Open the stop valve on both the gas and liquid side.
The stop valve of an outdoor unit is left closed.	E4 F3	Open the stop valve on both the gas and liquid side.
Insufficient refrigerant		Check if the additional refrigerant charge has been finished correctly. Recalculate the required amount of refrigerant from the piping length and add an adequate amount of refrigerant.
Refrigerant overcharge	F3 F6	Recalculate the required amount of refrigerant from the piping length and correct the refrigerant charge level by recovering any excessive refrigerant with a refrigerant recovery machine.
Insufficient supply voltage	U2	Check if the supply voltage is supplied properly.
The check operation is not performed.	U3	Perform the check operation.
No power is supplied to the outdoor unit.	U4	Check if the power wiring for the outdoor unit is connected correctly.
Improper type of indoor units are connected.	UA	Check the type of indoor units that are currently connected. If they are not proper, replace them with proper ones.
The stop valve of an outdoor unit is left closed.	UF	Open the stop valve on both the gas and liquid side.
The piping and wiring of the specified indoor unit are not connected correctly to the outdoor unit.		Confirm that the piping and wiring of the specified indoor unit are connected correctly to the outdoor unit.
Incorrect interconnections between units.	UH	Connect interconnections F1 and F2 of the connected BP unit correctly to the outdoor unit's PC board (TO BP UNIT).

11.5. Temperature adjustment operation confirmation

After the test run is over, operate the unit normally. (Heating is not possible if the outdoor temperature is 24°C or higher.)

- Make sure the indoor and outdoor units are operating normally (If a knocking sound can be heard in the liquid compression of the compressor, stop the unit immediately and then energize the heater for a sufficient length of time before restarting the operation.)
- Run each indoor unit one at a time and make sure the corresponding outdoor unit is also running.
- Check to see if cold (or hot) air is coming out of the indoor unit.
- Press the fan direction and fan strength buttons on the indoor unit to see if they operate properly.

Cautions for normal operation check

- Once stopping, the compressor will not restart in about 5 minutes even if the Run/Stop button of an indoor unit in the same system is pressed.
- When the system operation is stopped by the remote controller, the outdoor units may continue operating for a further 1 minute maximum.
- After the test run, when handling the unit over to the customer, make sure the electric box lid, the service lid and the unit casing are all attached properly.

12. Service mode operation

After turning on the power supply, the unit can not be started until the H2P initialisation led, indicating that the unit is still under preparation, goes off (maximum 12 minutes).

Vacuuming method

At the first installation, this vacuuming is not required. It is required only for repair purposes.

1 When the unit is at a standstill and under the setting mode 2, set the required function B (refrigerant recovery operation/ vacuuming operation) to **ON** (ON).
   - After this is set, do not reset the setting mode 2 until the vacuuming is finished.
   - The H1P led is on and the remote controller indicates **TEST** (test operation) and (external control) and the operation will be prohibited.

2 Vacuum the system with a vacuum pump.

3 Press the **BS1 MODE** button and reset the setting mode 2.

Refrigerant recovery operation method by a refrigerant reclaimer.

1 When the unit is at a standstill and in setting mode 2, set the required function B (refrigerant recovery operation/vacuuming operation) to **ON** (ON).
   - Expansion valves of BP unit and outdoor unit will fully open and some solenoid valves will open.
   - The H1P led is on and the remote controller indicates **TEST** (test operation) and (external control) and the operation will be prohibited.

2 Recover the refrigerant using a refrigerant reclaimer. For details, see the operation manual delivered with the refrigerant reclaimer.

3 Press the **BS1 MODE** button and reset the setting mode 2.

CAUTION

Never turn the power of the outdoor unit OFF while the refrigerant is being recovered.

If the power is turned OFF, the solenoid valves are closed and the refrigerant cannot be recovered from the outdoor unit.

13. Caution for refrigerant leaks

(Points to note in connection with refrigerant leaks.)

13.1. Introduction

The installer and system specialist shall secure safety against leakage according to local regulations or standards. The following standards may be applicable if local regulations are not available.

This unit, like other air conditioning systems, uses R410A as refrigerant. R410A itself is an entirely safe non-toxic, non-combustible refrigerant. Nevertheless care must be taken to ensure that air conditioning facilities are installed in a room which is sufficiently large. This assures that the maximum concentration level of refrigerant gas is not exceeded, in the unlikely event of major leak in the system and this in accordance to the local applicable regulations and standards.

13.2. Maximum concentration level

The maximum charge of refrigerant and the calculation of the maximum concentration of refrigerant is directly related to the humanly occupied space in to which it could leak.

The unit of measurement of the concentration is kg/m^3 (the weight in kg of the refrigerant gas in 1 m^3 volume of the occupied space).

Compliance to the local applicable regulations and standards for the maximum allowable concentration level is required.

According to the appropriate European Standard, the maximum allowed concentration level of refrigerant to a humanly space for R410A is limited to 0.44 kg/m^3.

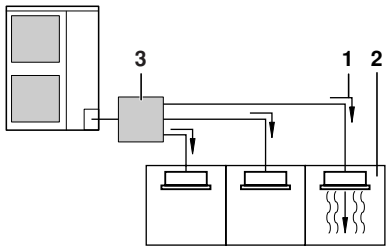

1 direction of the refrigerant flow

2 room where refrigerant leak has occurred (outflow of all the refrigerant from the system)

3 BP unit

Pay special attention to places, such as a basements, etc. where refrigerant can stay, since refrigerant is heavier than air.

13.3. Procedure for checking maximum concentration

Check the maximum concentration level in accordance with steps 1 to 4 below and take whatever action is necessary to comply.

1 Calculate the amount of refrigerant (kg) charged to each system separately.

amount of refrigerant in a single unit system (amount of refrigerant with which the system is charged before leaving the factory)	+	additional charging amount (amount of refrigerant added locally in accordance with the length or diameter of the refrigerant piping)	=	total amount of refrigerant (kg) in the system

NOTE Where a single refrigerant facility is divided into 2 entirely independent refrigerant systems, use the amount of refrigerant with which each separate system is charged.

2 Calculate the smallest room volume (m^3)

In a case such as the following, calculate the volume of (A), (B) as a single room or as the smallest room.

A. Where there are no smaller room divisions

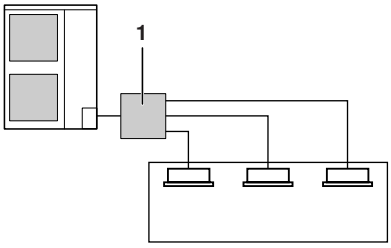

1 BP unit

B. Where there is a room division but there is an opening between the rooms sufficiently large to permit a free flow of air back and forth.

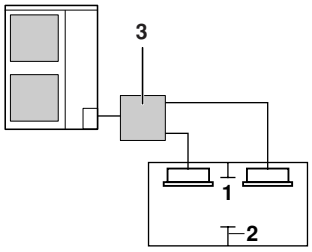

1 opening between rooms

2 partition
(Where there is an opening without a door or where there are openings above and below the door which are each equivalent in size to 0.15% or more of the floor area.)

3 BP unit

3 Calculating the refrigerant density using the results of the calculations in steps 1 and 2 above.

$$\frac{\text{total volume of refrigerant in the refrigerant system}}{\text{size } (m^3) \text{ of smallest room in which there is an indoor unit installed}} \leq \text{maximum concentration level } (kg/m^3)$$

If the result of the above calculation exceeds the maximum concentration level then make similar calculations for the second then third smallest room and so until the result falls short of the maximum concentration.

4 Dealing with the situations where the result exceeds the maximum concentration level.

Where the installation of a facility results in a concentration in excess of the maximum concentration level then it will be necessary to revise the system.
Please consult your supplier.

14. Disposal requirements

Dismantling of the unit, treatment of the refrigerant, of oil and of other parts must be done in accordance with relevant local and national legislation.

Notes

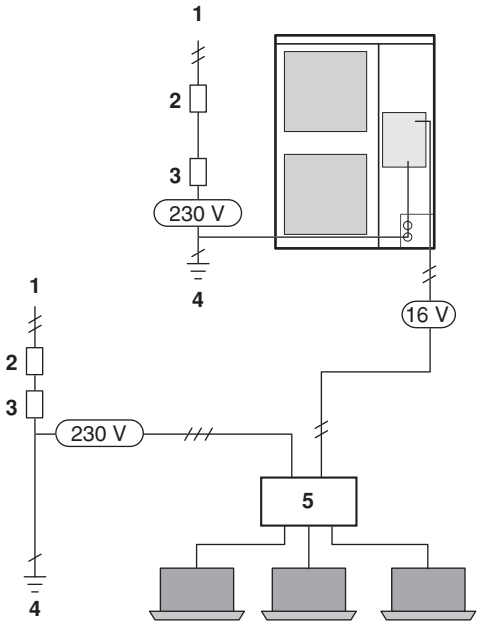

9

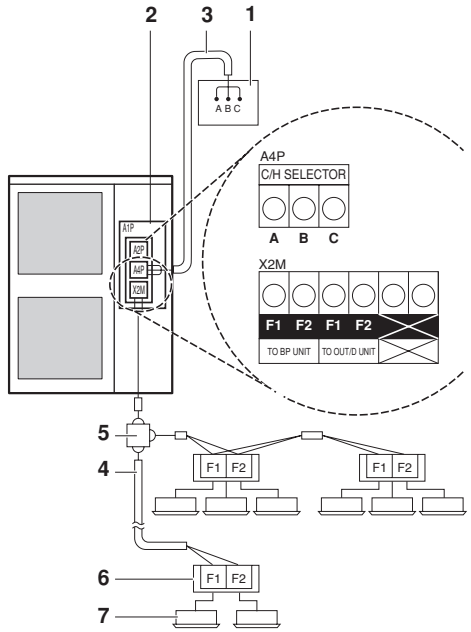

11

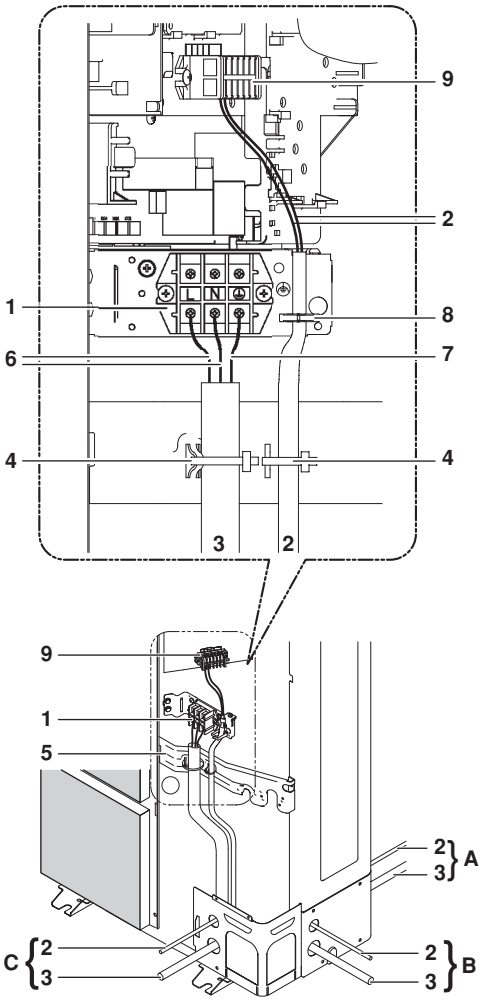

10

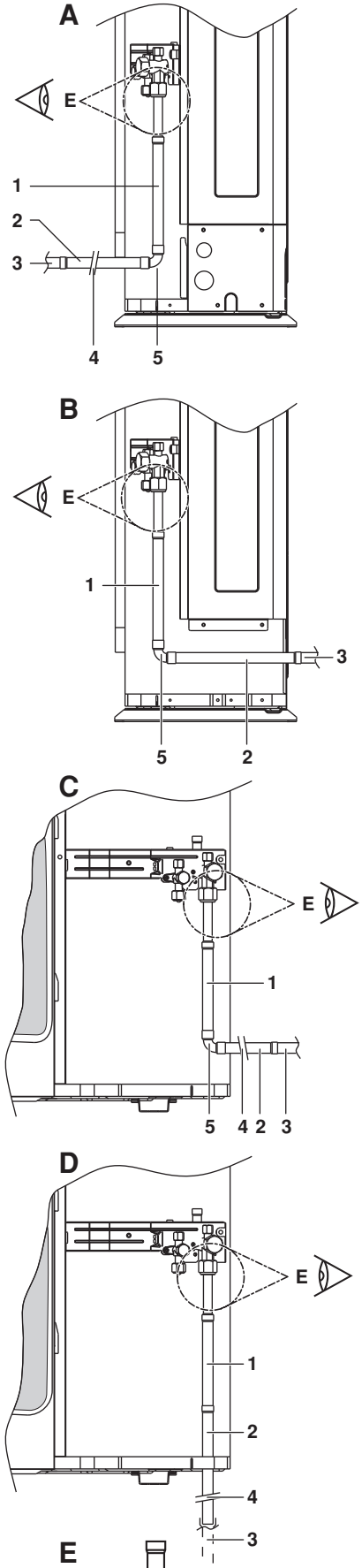

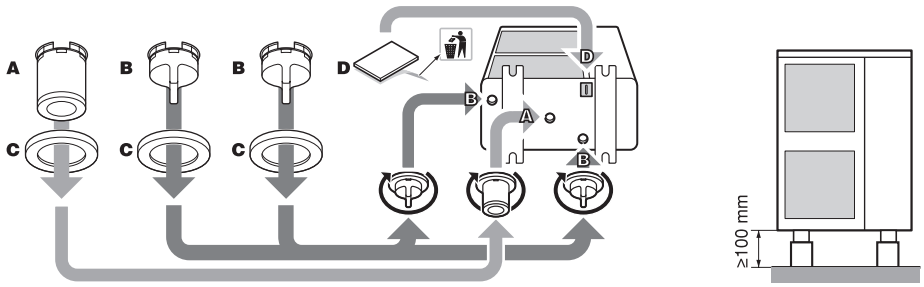

12

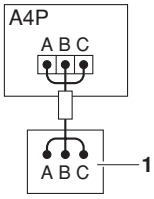

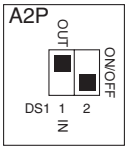

13

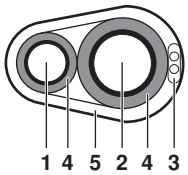

14

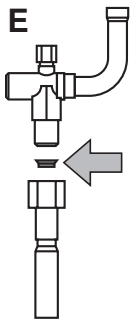

15

DAIKIN EUROPE NV
Zandvoordestraat 300, B-8400 Oostende, Belgium

4PW29035-1B