DAIKIN

SkyAir

Air Conditioning Technical Data

FFA-A9

> FFA25A2VEB9
> FFA35A2VEB9
> FFA50A2VEB9
> FFA60A2VEB9

TABLE OF CONTENTS

FFA-A9

1 Features 2

2 Specifications 3
Technical Specifications 3
Electrical Specifications 4

3 Safety device settings 5

4 Options 6

5 Dimensional drawings 7

6 Centre of gravity 9

7 Piping diagrams 10

8 Wiring diagrams 11
Wiring Diagrams - Single Phase 11

9 Sound data 12
Sound Pressure Spectrum 12

10 Air flow patterns 14
Air Flow Pattern - Cooling 14
Air Flow Pattern - Heating 18

1 Features

Unique design in the market that integrates fully flat into the ceiling

- Fully flat integration in standard architectural ceiling tiles, leaving only 8mm
- Remarkable blend of iconic design and engineering excellence with an elegant finish in white or a combination of silver and white
- Unified indoor unit range for R-32 and R-410A
- Combining with R-32 Bluevolution technology, reduces environmental impact with 68% compared to R-410A, leads directly to lower energy consumption thanks to its high energy efficiency and has up to lower 16% refrigerant charge
- Two optional intelligent sensors improve energy efficiency and comfort
- Individual flap control: flexibility to suit every room layout without changing the location of the unit!
- Reduced energy consumption thanks to specially developed small tube heat exchanger, DC fan motor and drain pump
- Optional fresh air intake
- Branch duct discharge allows to optimize air distribution in irregular shaped rooms or to supply air to small adjacent rooms
- Standard drain pump with 630mm lift increases flexibility and installation speed

Infrastructure cooling | Inverter | Presence & floor sensor | Home leave operation | Fan only | Draught prevention | Auto cooling-heating changeover | Whisper quiet | Ceiling soiling prevention

Individual flap control | Vertical auto swing | Fan speed steps | Dry programme | Air filter | Weekly timer | Infrared remote control | Wired remote control | Centralised control

Online controller via app | Auto-restart | Self diagnosis | Drain pump kit | Twin/triple/ double twin application | Multi model application | VRV for residential application

2 Specifications

2-1 Technical Specifications					FFA25A9	FFA35A9	FFA50A9	FFA60A9
Casing	Material				Galvanised steel plate			
Dimensions	Unit	Height/Width/Depth		mm	260/575/575			
	Packed unit	Height/Width/Depth		mm	280/686/597			
Weight	Unit			kg	16.0		17.5	
	Packed unit			kg	18.0		19.0	
Decoration panel	Model				BYFQ60C2W1W			
	Colour				White (N9.5)			
	Dimensions	HeightxWidthxDepth		mm	46x620x620			
	Weight			kg	2.8			
Decoration panel 2	Model				BYFQ60C2W1S			
	Colour				SILVER			
	Dimensions	HeightxWidthxDepth		mm	46x620x620			
	Weight			kg	2.8			
Decoration panel 3	Model				BYFQ60B2W1			
	Colour				White (RAL9010)			
	Dimensions	HeightxWidthxDepth		mm	55x700x700			
	Weight			kg	2.7			
Decoration panel 4	Model				BYFQ60B3W1			
	Colour				WHITE (RAL9010)			
	Dimensions	HeightxWidthxDepth		mm	55x700x700			
	Weight			kg	2.7			
Heat exchanger	Inside length			mm	1,295		1,248	
	Outside length			mm	1,342			
	Rows	Quantity			2		3	
	Fin pitch			mm	1.20			
	Passes	Quantity			5		7	
	Face area			m²	0.29		0.30	
	Stages	Quantity			12		16	
	Empty tubeplate hole	Quantity			0			
	Fin	Type			Cross fin coil (multi slit fins and hi-XA tubes)			
Air filter	Type				Resin net			
Fan	Model				QTS32D15M			
	Type				Turbo fan			
	Quantity				1			
	Air flow rate	Cooling	High	m³/min	9.0	10.0	12.7	14.5
				cfm	318	353	448	512
			Medium	m³/min	8.0	8.5	10.9	12.5
				cfm	282	300	385	442
			Low	m³/min	6.5		8.6	9.5
				cfm	230		304	336
		Heating	High	m³/min	9.0	10.0	12.7	14.5
				cfm	318	353	448	512
			Medium	m³/min	8.0	8.5	10.9	12.5
				cfm	282	300	385	442
			Low	m³/min	6.5		8.6	9.5
				cfm	230		304	336

2 Specifications

2-1 Technical Specifications					FFA25A9	FFA35A9	FFA50A9	FFA60A9
Fan motor	Quantity				1			
	Model				ARW5204DK			
	Speed	Steps			3			
		Cooling	High/ Low	rpm	653/447		793/538	900/581
		Heating	High/ Low	rpm	653/447		793/538	900/581
	Output	High		W	50			
Sound power level	Cooling			dBA	48.0	51.0	56.0	60.0
Sound pressure level	Cooling	High/Medium/ Low		dBA	31.0/28.5/25.0	34.0/30.5/25.0	39.0/34.0/27.0	43.0/40.0/32.0
	Heating	High/Medium/ Low		dBA	31.0/28.5/25.0	34.0/30.5/25.0	39.0/34.0/27.0	43.0/40.0/32.0
Control systems	Infrared remote control				BRC7EB530W (standard panel) / BRC7F530W (white panel) / BRC7F530S (grey panel)			
	Wired remote control				BRC1D528 / BRC1E53A7 / BRC1E53B7 / BRC1E53C7			
Refrigerant	Type				R-32 / R-410A			
Piping connections	Sound absorbing insulation				Foamed polyurethane			
	Liquid	Type/OD		mm	Flare connection/6,35			
	Gas	Type/OD		mm	Flare connection/9.52		Flare connection/12.70	
	Drain				VP20 (I.D. 20/O.D. 26)			
	Heat insulation				Foamed polystyrene/polyethylene			

Standard Accessories : Installation and operation manual; Quantity : 1;
Standard Accessories : Drain hose; Quantity : 1;
Standard Accessories : Hose band; Quantity : 1;
Standard Accessories : Washer for hanger bracket; Quantity : 8;
Standard Accessories : Screws; Quantity : 4;
Standard Accessories : Thermal insulation tube; Quantity : 2;
Standard Accessories : Sealing material; Quantity : 4;
Standard Accessories : Tie-wraps; Quantity : 7;

2-2 Electrical Specifications			FFA25A9	FFA35A9	FFA50A9	FFA60A9
Power supply	Phase		1~			
	Frequency	Hz	50			
	Voltage	V	220-240			

3 Safety device settings

3 - 1 Safety Device Settings

FFA-A9

Safety devices		FFA25-60A2VEB(9)
PCB fuse		250V, 3.15A
PCB fuse (fan driver)		---
Fan motor overcurrent protection	Nominal	0.74A
Fan motor thermal protector	Maximum	108°C
Drain pump fuse		---

4D110743

4 Options

4 - 1 Options

FFA-A9

Option kit	Product name	Compatibility: BYFQ60B2W1 BYFQ60B3W1	Compatibility: BYFQ60C2W1W	Compatibility: BYFQ60C2W1S	Availability: SA FFA25A2VEB(9) FFA35A2VEB(9) FFA50A2VEB(9) FFA60A2VEB(9)
Decoration panel - Standard	BYFQ60B2W1	-	-	-	✓
Decoration panel - Standard	BYFQ60B3W1	-	-	-	✓
Decoration panel - White	BYFQ60C2W1W	-	-	-	✓
Decoration panel - Silver	BYFQ60C2W1S	-	-	-	✓
Sensor kit - White	BRYQ60A2W③	No	Yes	No	✓
Sensor kit - Silver	BRYQ60A2S③	No	No	Yes	✓
Air discharge outlet sealing member	BDBHQ44C60	Yes	Yes	Yes	✓
Panel spacer	KDBQ44B60	Yes	No	No	✓
Long-life replacement filter	KAFQ441BA60	Yes	Yes	Yes	✓
Fresh air intake kit	KDDQ44XA60	Yes	Yes	Yes	✓
Remote control | Infrared type | HP	BRC7EB530W①②	Yes	No	No	✓
Remote control | Infrared type | HP | White	BRC7F530W①②	No	Yes	No	✓
Remote control | Infrared type | HP | Silver	BRC7F530S①②	No	No	Yes	✓
Wired remote control	BRC1D528②, BRC1H51(9)W/S/K, BRC1H81W/S	Yes Yes	Yes Yes	Yes Yes	✓
Wired remote control	BRC1E53A7⑧/BRC1E53B7⑨/ BRC1E53C7⑩⑪	Yes	Yes	Yes	✓
Simplified remote control (with operation mode selector button)	BRC2E52C7⑤⑪	Yes	Yes	Yes	✓
Simplified remote control (without operation mode selector button)	BRC3E52C7⑤⑪	Yes	Yes	Yes	✓
Central remote control	DCS302B51				✓
Unified ON/OFF controller	DCS301B51	Yes	Yes	Yes	✓
Schedule timer	DST301B51	Yes	Yes	Yes	✓
Wiring adaptor for electrical appendices	KRP1B57	Yes	Yes	Yes	✓
Wiring adaptor for electrical appendices	KRP4A53	Yes	Yes	Yes	✓
Wiring adaptor (hour meter)	EKRP1B2	Yes	Yes	Yes	✓
Installation box for adaptor PCB	KRP1B101, KRP1BA101	Yes	Yes	Yes	✓
Remote sensor	KRCS01-4B	Yes	Yes	Yes	✓
iTouch Controller	DCS601C51	Yes	Yes	Yes	✓
Centralised control systems	DCC601A51	Yes	Yes	Yes	✓
Intelligent touch controller	DCM601A5A	Yes	Yes	Yes	✓
Digital input adaptor	BRP7A53⑥	Yes	Yes	Yes	✓
Wi-Fi adaptor for smartphones	BRP069A81⑬	Yes	Yes	Yes	✓

①: The sensing function is not available.
②: The independently-controllable-flaps function is not available.
③: This option cannot be used with RR and RQ models.
④: The independently-controllable-flaps function is not available in combination with RR and RQ models.
⑤: Included languages are:
Language pack 1: English, German, French, Dutch, Spanish, Italian, and Portuguese.
With PC cable EKPCCAB3 in combination with the Updater PC software, you can additionally change the language to:
Language pack 3: English, Greek, Polish, Russian, Serbian, Slovak, and Turkish.
Language pack 2: English, Bulgarian, Croatian, Czech, Hungarian, Romanian, and Slovenian.
⑥: Only possible in combination with remote control BRC2/3E52C, BRC1E53A/B/C7, BRC1H51(9)W/S/K, BRC1H81W/S.
⑦: Requires installation box for adaptor PCB
⑧: Included languages are: English, German, French, Italian, Spanish, Portuguese, and Dutch.
⑨: Included languages are: English, Czech, Croatian, Hungarian, Slovenian, Romanian, and Bulgarian.
⑩: Included languages are: English, Russian, Greek, Turkish, Polish, Albanian, and Slovak.
⑪: Language pack 3 of controller BRC1E53C7 is different from that of controller BRC2/3E52C7.
⑫: Only possible in combination with wired or wireless remote control (e.g. BRC1E*, BRC1H*, BRC7FA*)

3D106135B

5 Dimensional drawings

5 - 1 Dimensional Drawings

FFA25-35A9

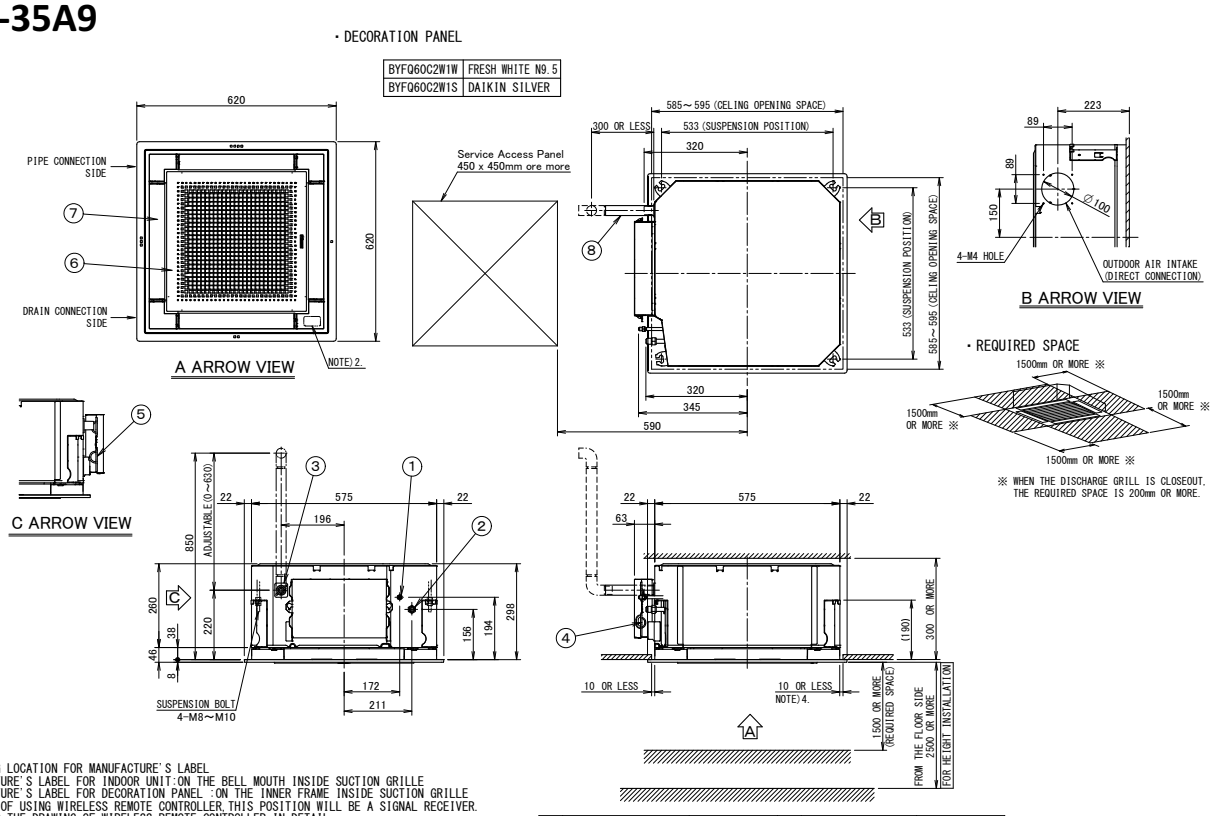

NOTE) 1. STICKING LOCATION FOR MANUFACTURE'S LABEL.
MANUFACTURE'S LABEL FOR INDOOR UNIT:ON THE BELL MOUTH INSIDE SUCTION GRILLE
MANUFACTURE'S LABEL FOR DECORATION PANEL :ON THE INNER FRAME INSIDE SUCTION GRILLE
2. IN CASE OF USING WIRELESS REMOTE CONTROLLER,THIS POSITION WILL BE A SIGNAL RECEIVER. REFER TO THE DRAWING OF WIRELESS REMOTE CONTROLLER IN DETAIL.
3. WHEN THE TEMPERATURE AND HUMIDITY IN THE CEILING EXCEED 30℃ AND RH 80% OR THE FRESH AIR IS INDUCTED INTO THE CEILING OR THE UNIT CONTINUES 24 HOUR OPERATION,AN ADDITIONAL INSULATION (THICKNESS 10mm OR MORE OF GLASSWOOL OR POLYETHYLENE FORM) IS REQUIRED.
4. THOUGH THE INSTALLATION IS ACCEPTABLE UP TO MAXIMUM OF 595mm SQUARE CEILING OPENING, KEEP THE CLEARANCE OF 10mm OR LESS BETWEEN THE MAIN UNIT AND THE CEILING OPENING SO THAT THE PANEL OVERLAP ALLOWANCE CAN BE ENSURED.

ITEM	PART NAME	REMARK	ITEM	PART NAME	REMARK
1	LIQUID PIPE CONNECTION	φ6.4 (FRARE CONNECTION)	5	REMOTE CONTROL CODE AND CONTROL WIRING CONNECTION	
2	GAS PIPE CONNECTION	φ9.5 (FRARE CONNECTION)	6	AIR DISCHARGE GRILL	
3	DRAIN PIPE CONNECTION	VP20 (O.D. φ26)	7	SUCTION GRILL	
4	POWER SUPPLY CONNECTION		8	DRAIN HOSE (ACCESSORY)	I.D. φ25 (OUTLET)

3D082433

FFA25-35A9

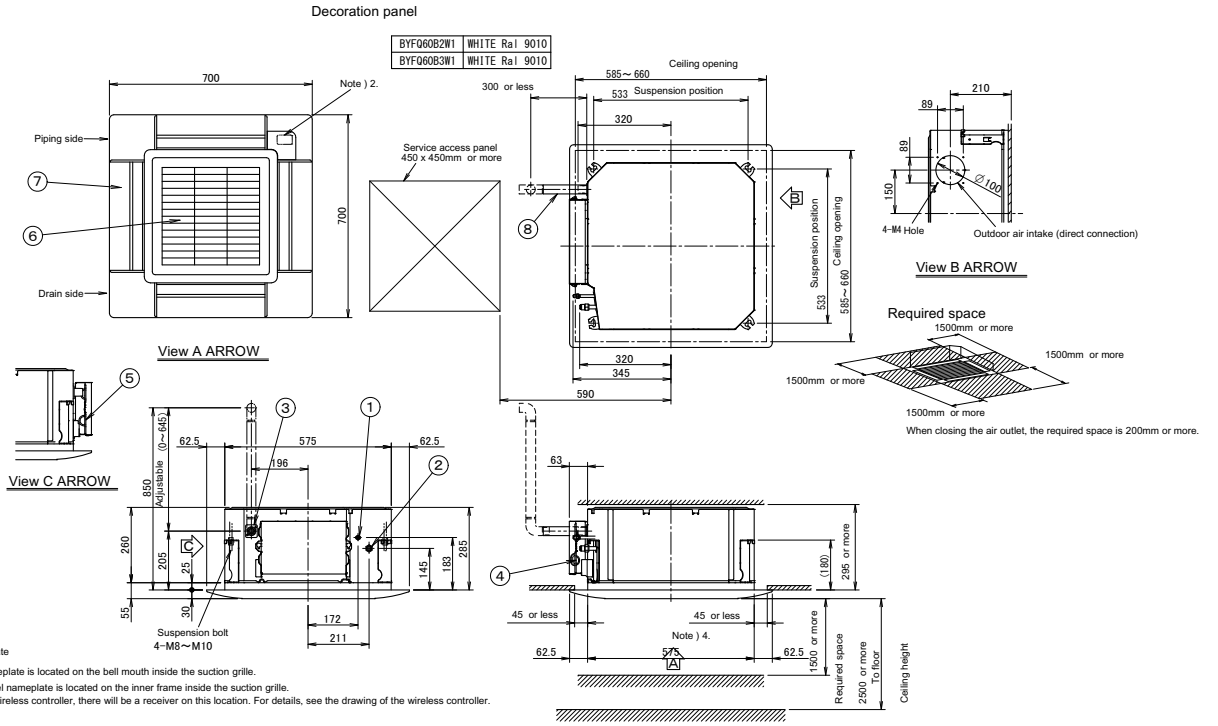

Note)
1. Location of nameplate
The indoor unit nameplate is located on the bell mouth inside the suction grille.
The decoration panel nameplate is located on the inner frame inside the suction grille.
2. When installing a wireless controller, there will be a receiver on this location. For details, see the drawing of the wireless controller.
3. If any of the following conditions are met, additional insulation (glass wool or polyethylene foam, thickness ≥10mm) is required:
Ambient conditions in the ceiling ≥ 30°C and 80% relative humidity.
Fresh air is inducted into the ceiling. The unit operates continuously.
4. Though the installation is acceptable up to maximum 660mm square ceiling opening, keep the clearance of 45mm or less between the indoor unit and the ceiling opening, so that the panel overlap allowance can be ensured.

Item	Part name	Remark	Item	Part name	Remark
1	Liquid pipe connection	φ6.4 Flare connection	5	Remote control wiring intake	
2	Gas pipe connection	φ9.5 Flare connection	6	Air discharge grille	
3	Drain pipe connection	VP20 (O.D. φ26)	7	Air suction grille	
4	Power supply		8	Drain hose Accessory	I.D. φ25 Outlet

3D082434C

5 Dimensional drawings

5 - 1 Dimensional Drawings

5

FFA50-60A9

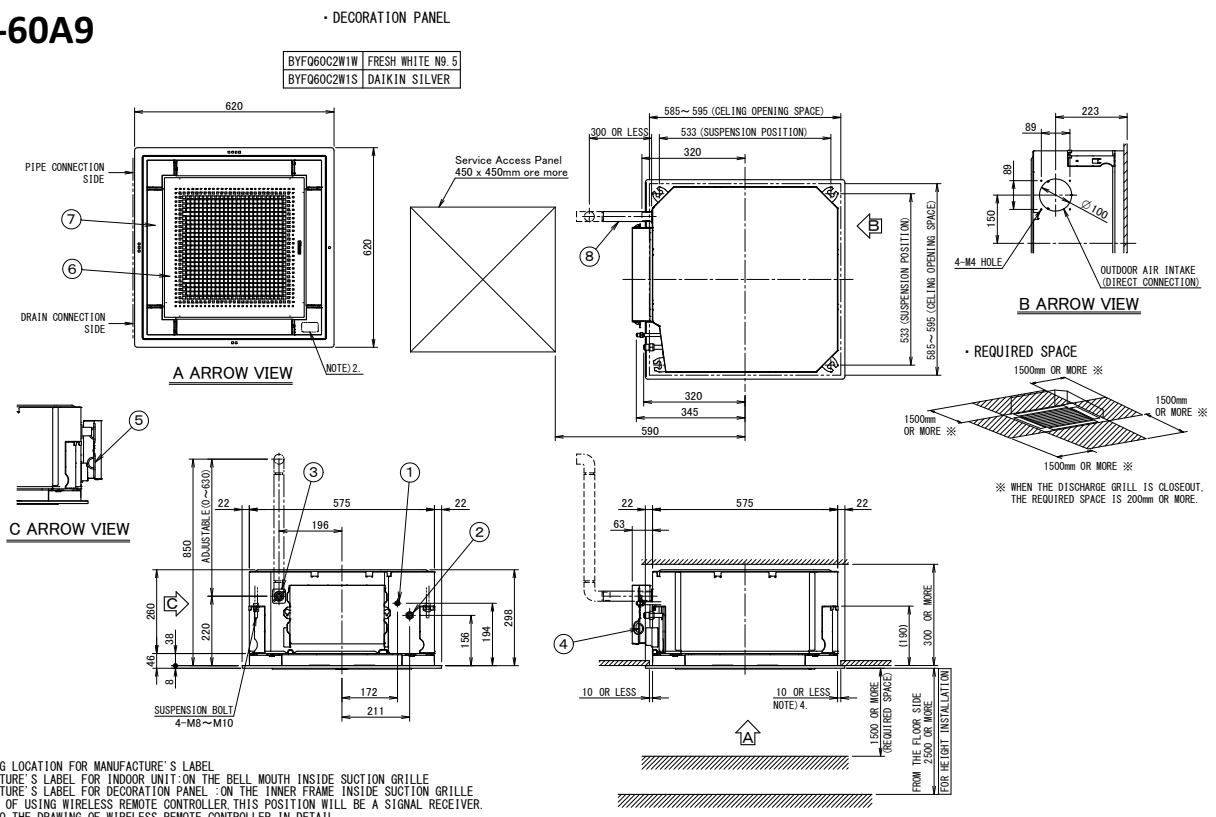

NOTE) 1. STICKING LOCATION FOR MANUFACTURE'S LABEL
MANUFACTURE'S LABEL FOR INDOOR UNIT:ON THE BELL MOUTH INSIDE SUCTION GRILLE
MANUFACTURE'S LABEL FOR DECORATION PANEL :ON THE INNER FRAME INSIDE SUCTION GRILLE
2. IN CASE OF USING WIRELESS REMOTE CONTROLLER, THIS POSITION WILL BE A SIGNAL RECEIVER. REFER TO THE DRAWING OF WIRELESS REMOTE CONTROLLER IN DETAIL.
3. WHEN THE TEMPERATURE AND HUMIDITY IN THE CEILING EXCEED 30°C AND RH 80% OR THE FRESH AIR IS INDUCTED INTO THE CEILING OR THE UNIT CONTINUES 24 HOUR OPERATION, AN ADDITIONAL INSULATION (THICKNESS 10mm OR MORE OF GLASSWOOL OR POLYETHYLENE FORM) IS REQUIRED.
4. THOUGH THE INSTALLATION IS ACCEPTABLE UP TO MAXIMUM OF 595mm SQUARE CEILING OPENING, KEEP THE CLEARANCE OF 10mm OR LESS BETWEEN THE MAIN UNIT AND THE CEILING OPENING SO THAT THE PANEL OVERLAP ALLOWANCE CAN BE ENSURED.

ITEM	PART NAME	REMARK	ITEM	PART NAME	REMARK
1	LIQUID PIPE CONNECTION	φ6.4 (FRARE CONNECTION)	5	REMOTE CONTROL CODE AND CONTROL WIRING CONNECTION	
2	GAS PIPE CONNECTION	φ12.7 (FRARE CONNECTION)	6	AIR DISCHARGE GRILL	
3	DRAIN PIPE CONNECTION	VP20 (O.D. φ26)	7	SUCTION GRILL	
4	POWER SUPPLY CONNECTION		8	DRAIN HOSE (ACCESSORY)	I.D. φ25 (OUTLET)

3D082052

FFA50-60A9

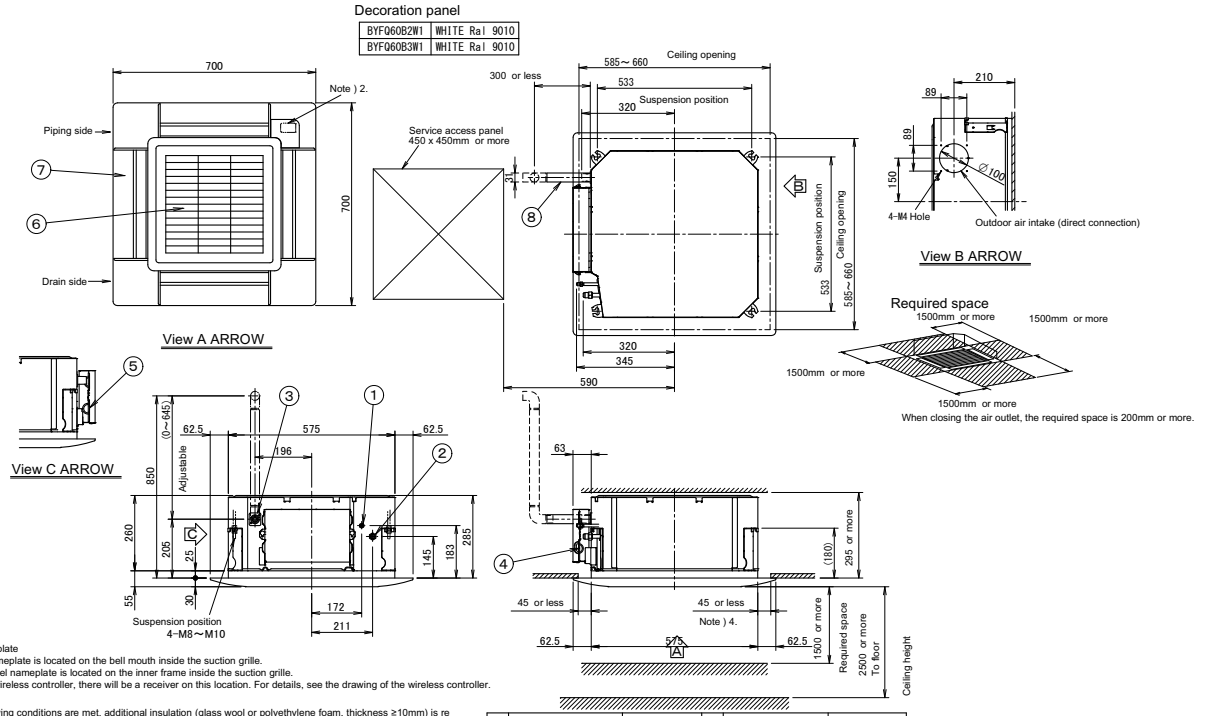

Note)
1. Location of nameplate
The indoor unit nameplate is located on the bell mouth inside the suction grille.
The decoration panel nameplate is located on the inner frame inside the suction grille.
2. When installing a wireless controller, there will be a receiver on this location. For details, see the drawing of the wireless controller.

3. If any of the following conditions are met, additional insulation (glass wool or polyethylene foam, thickness ≥10mm) is required:
Ambient conditions in the ceiling ≥ 30°C and 80% relative humidity.
Fresh air is inducted into the ceiling. The unit operates continuously.

4. Though the installation is acceptable up to maximum 660mm square ceiling opening, keep the clearance of 45mm or less between the indoor unit and the ceiling opening, so that the panel overlap allowance can be ensured.

Item	Part name	Remark	Item	Part name	Remark
1	Liquid pipe connection	φ6.4 Flare connection	5		
2	Gas pipe connection	φ12.7 Flare connection	6	Air discharge grille	
3	Drain pipe connection	VP20 (O.D. φ26)	7	Air suction grille	
4	Power supply		8	Drain hose Accessory	I.D. φ25 Outlet

3D082161C

6 Centre of gravity

6 - 1 Centre of Gravity

FFA-A9

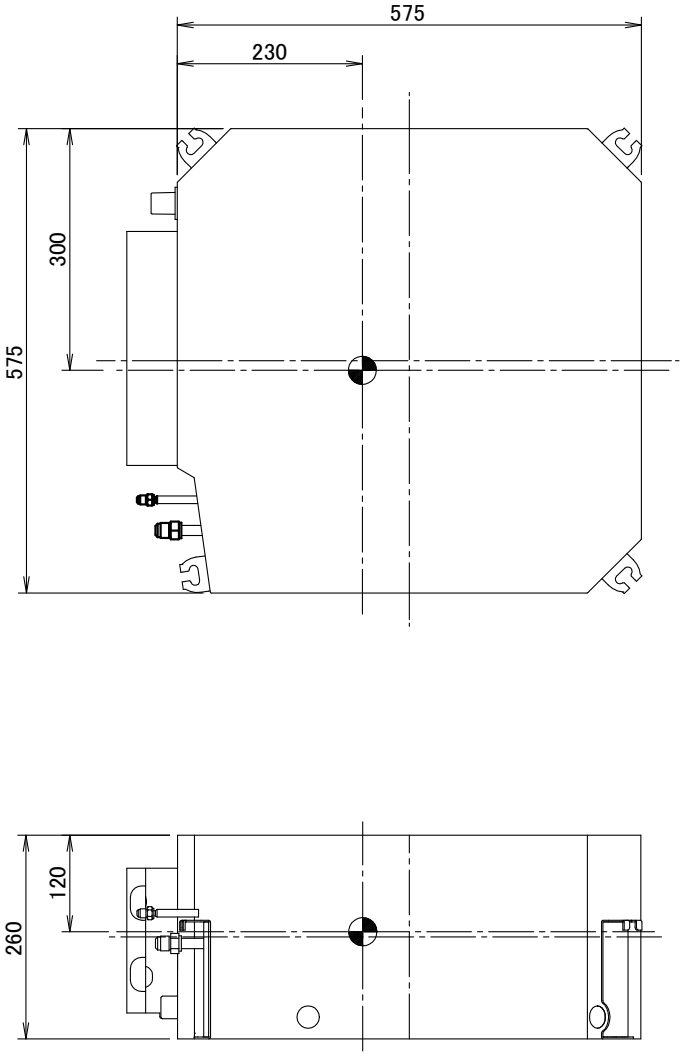

4D082432

7 Piping diagrams

7 - 1 Piping Diagrams

FFA-A9

Model	A	B
FFQ25C2VEB	6. 35	9. 52
FFQ35C2VEB		
FFQ50C2VEB		12. 7
FFQ60C2VEB		
FFA25A2VEB		9. 52
FFA35A2VEB		
FFA50A2VEB		12. 7
FFA60A2VEB		
FFA25A2VEB9		9. 5
FFA35A2VEB9		
FFA50A2VEB9		12. 7
FFA60A2VEB9		

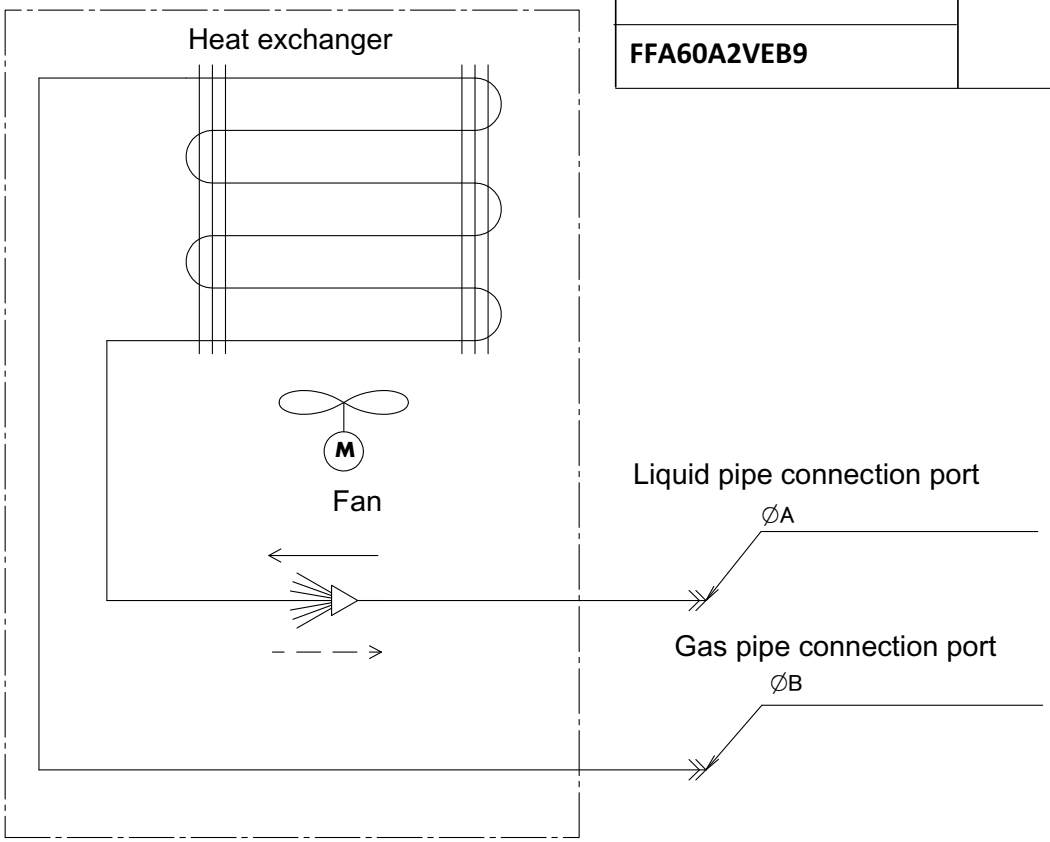

4D082551A

8 Wiring diagrams

8 - 1 Wiring Diagrams - Single Phase

FFA-A9

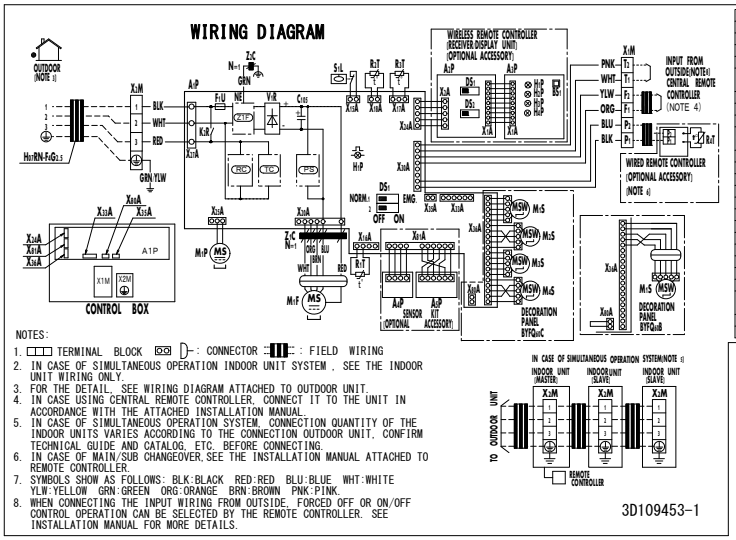

INDOOR UNIT		H1P	PILOT LAMP (ON-RED)
A1P	PRINTED CIRCUIT BOARD	H2P	PILOT LAMP (TIMER-GREEN)
C1~C5	CAPACITOR	H3P	PILOT LAMP (FILTER SIGN-RED)
DS1	DIP SWITCH ON PCB	H4P	PILOT LAMP (DEFROST-ORANGE)
F1U	FUSE(F, 3, 15A, 250V)	DS1	SELECTOR SWITCH (MAIN/SUB)
H1P	FLASHING LAMP (SERVICE MONITOR GREEN)	DS2	SELECTOR SWITCH (WIRELESS ADDRESS SET)
K2R	MAGNETIC RELAY		SENSOR KIT
M1F	FAN MOTOR	A4P	PRINTED CIRCUIT BOARD
M1P	DRAIN PUMP MOTOR	A5P	PRINTED CIRCUIT BOARD
M1S~M2S M3S~M4S	SWING MOTOR		WIRED REMOTE CONTROLLER
R1T	THERMISTOR(AIR)	R4T	THERMISTOR (AIR)
R2T~R3T	THERMISTOR(COIL)		CONNECTOR FOR OPTIONAL PARTS
S1L	FLOAT SWITCH	X24A	CONNECTOR (WIRING REMOTE CONTROLLER)
V1R	DIODE BRIDGE	X33A	CONNECTOR (ADAPTOR FOR WIRING)
X1M	TERMINAL BLOCK	X35A	CONNECTOR (POWER SUPPLY FOR ADAPTOR)
X2M	TERMINAL BLOCK	X81A	CONNECTOR (SENSOR KIT)
Z1F	NOISE FILTER		
Z1C	FERRITE CORE		
Z2C	FERRITE CORE		
PS	SWITCHING POWER SUPPLY		
RC	RECEIVER		
TC	TRANSMITTER		
WIRELESS REMOTE CONTROLLER (RECEIVER/DISPLAY UNIT)			
A2P~A3P	PRINTED CIRCUIT BOARD		
BS1	PUSH BUTTON SWITCH ON PCB		

NOTES:

1. DIMENSIONS FOR PRINTING ARE:

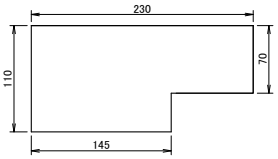

3D109453A

9 Sound data

9 - 1 Sound Pressure Spectrum

FFA25A9

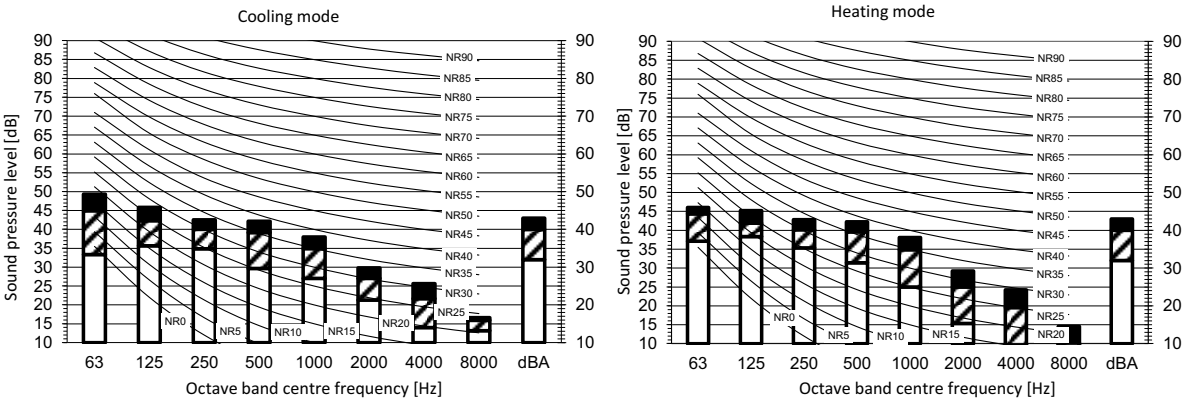

Legend
dBA = A-weighted sound pressure level (A scale according to IEC).

A	Scale	Fan speed
B	■	High
C	▨	Medium
D	□	Low

Cooling Total dB

A	B	C	D
dBA	31	28,5	25

Heating Total dB

A	B	C	D
dBA	31	28,5	25

Location of microphone

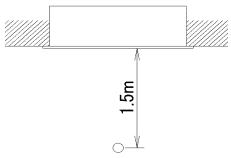

Notes

1. Operating conditions: power source 220-240 V/220 V 50/60 Hz; JIS standard
2. Background noise already taken into account.
3. Operating noise varies depending on operation and ambient conditions.
4. The operation noise measuring method is in accordance with JISC9612.
5. Measuring location: anechoic chamber

3D109998

FFA35A9

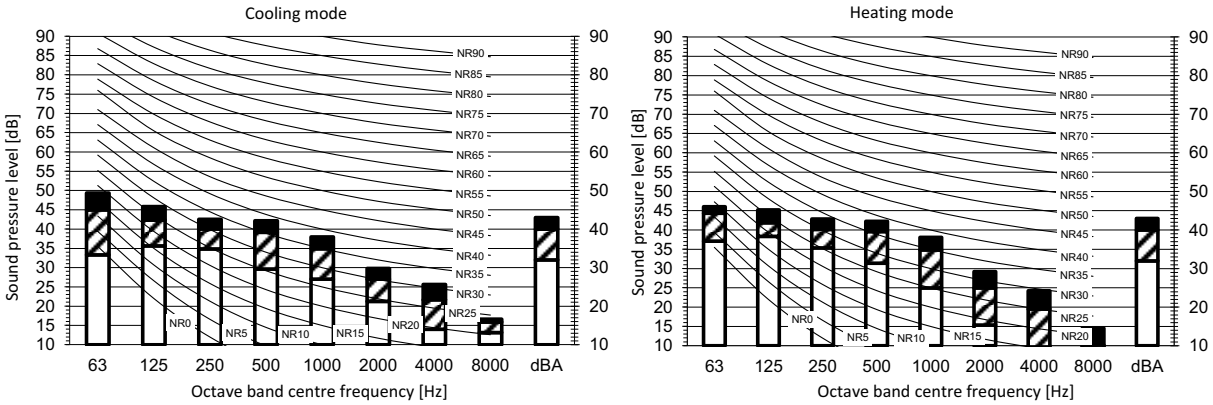

Legend
dBA = A-weighted sound pressure level (A scale according to IEC).

A	Scale	Fan speed
B	■	High
C	▨	Medium
D	□	Low

Cooling Total dB

A	B	C	D
dBA	34	30,5	25

Heating Total dB

A	B	C	D
dBA	34	30,5	25

Location of microphone

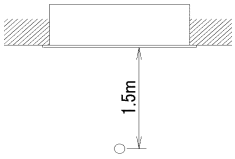

Notes

1. Operating conditions: power source 220-240 V/220 V 50/60 Hz; JIS standard
2. Background noise already taken into account.
3. Operating noise varies depending on operation and ambient conditions.
4. The operation noise measuring method is in accordance with JISC9612.
5. Measuring location: anechoic chamber

3D109999

9 Sound data

9 - 1 Sound Pressure Spectrum

FFA50A9

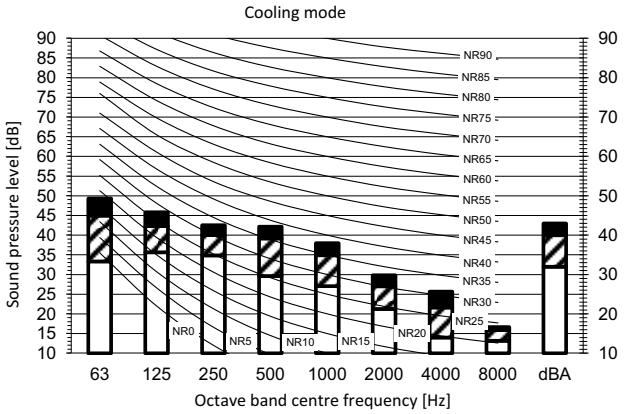

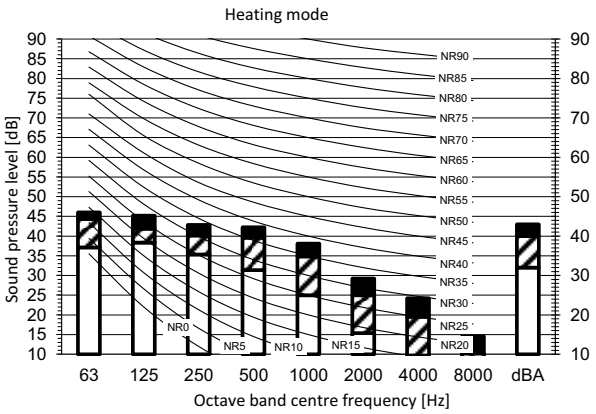

Legend
dBA = A-weighted sound pressure level (A scale according to IEC).

A Scale — Fan speed
B — High
C — Medium
D — Low

Location of microphone

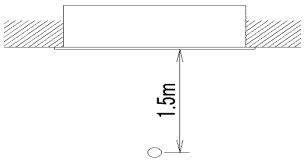

Cooling — Total dB

A	B	C	D
dBA	39	34	27

Heating — Total dB

A	B	C	D
dBA	39	34	27

Notes
1. Operating conditions: power source 220-240 V/220 V 50/60 Hz; JIS standard
2. Background noise already taken into account.
3. Operating noise varies depending on operation and ambient conditions.
4. The operation noise measuring method is in accordance with JISC9612.
5. Measuring location: anechoic chamber

3D110000

FFA60A9

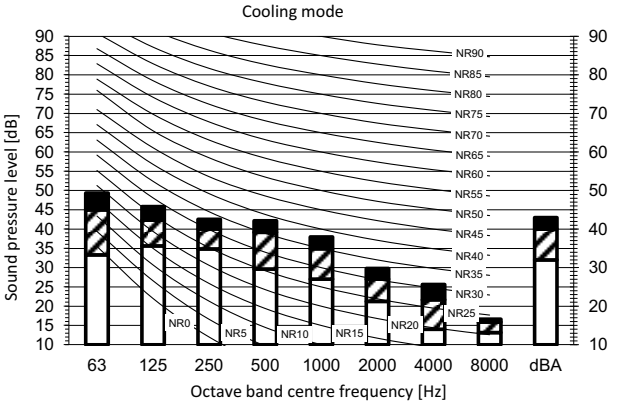

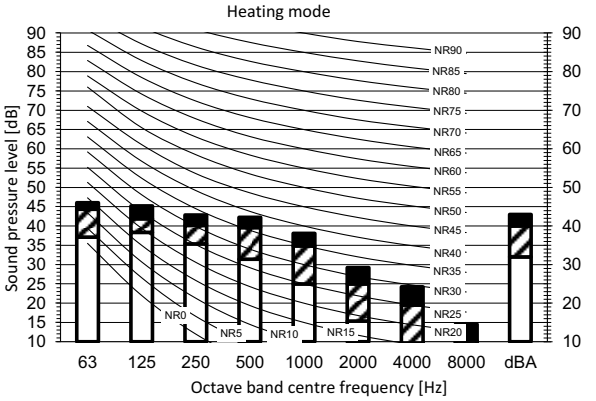

Legend
dBA = A-weighted sound pressure level (A scale according to IEC).

A Scale — Fan speed
B — High
C — Medium
D — Low

Location of microphone

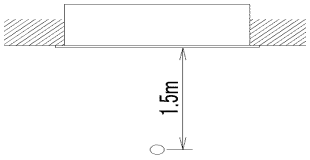

Cooling — Total dB

A	B	C	D
dBA	43	40	32

Heating — Total dB

A	B	C	D
dBA	43	40	32

Notes
1. Operating conditions: power source 220-240 V/220 V 50/60 Hz; JIS standard
2. Background noise already taken into account.
3. Operating noise varies depending on operation and ambient conditions.
4. The operation noise measuring method is in accordance with JISC9612.
5. Measuring location: anechoic chamber

3D110001

10 Air flow patterns

10 - 1 Air Flow Pattern - Cooling

FFA25A9

Air velocity distribution (cooling)

Air flow direction: horizontal

Air discharge: all-round

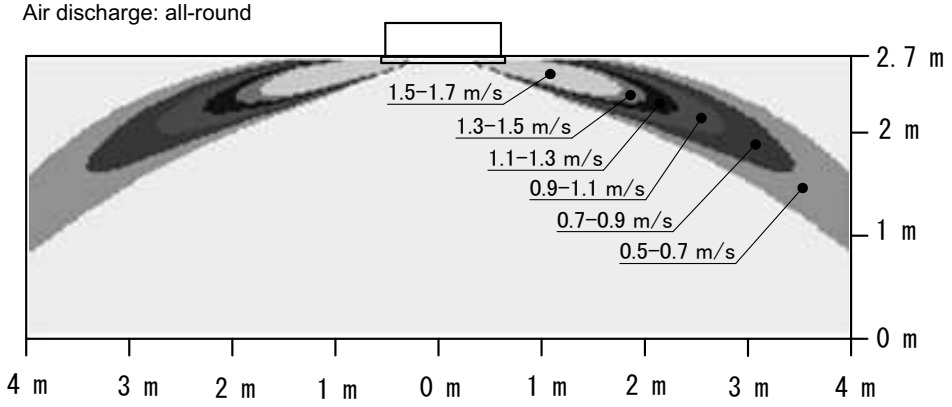

Air temperature distribution (cooling)

Air flow direction: horizontal

Air discharge: all-round

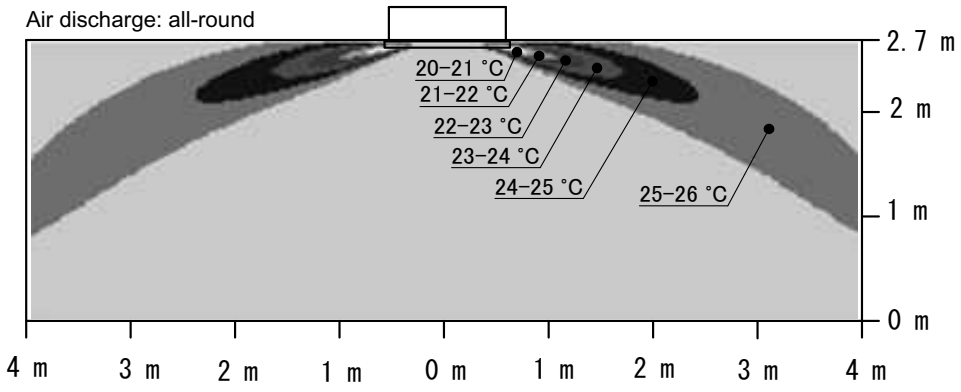

4D083819A

10 Air flow patterns

10 - 1 Air Flow Pattern - Cooling

FFA35A9

Air velocity distribution (cooling)

Air flow direction: horizontal

Air discharge: all-round

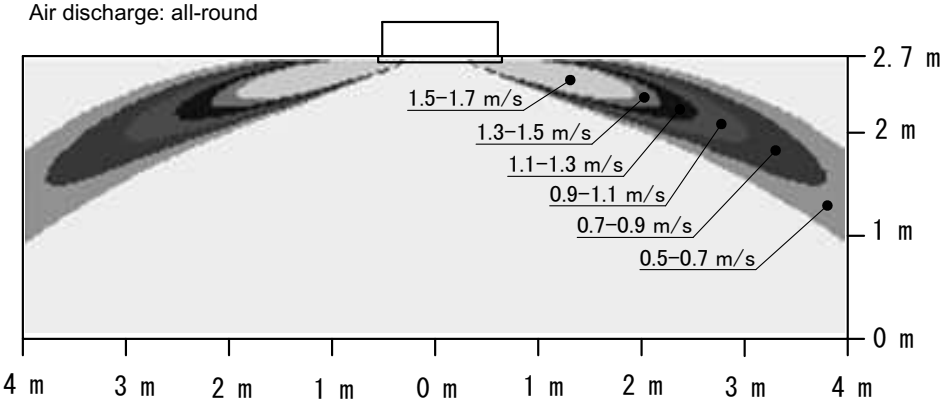

Air temperature distribution (cooling)

Air flow direction: horizontal

Air discharge: all-round

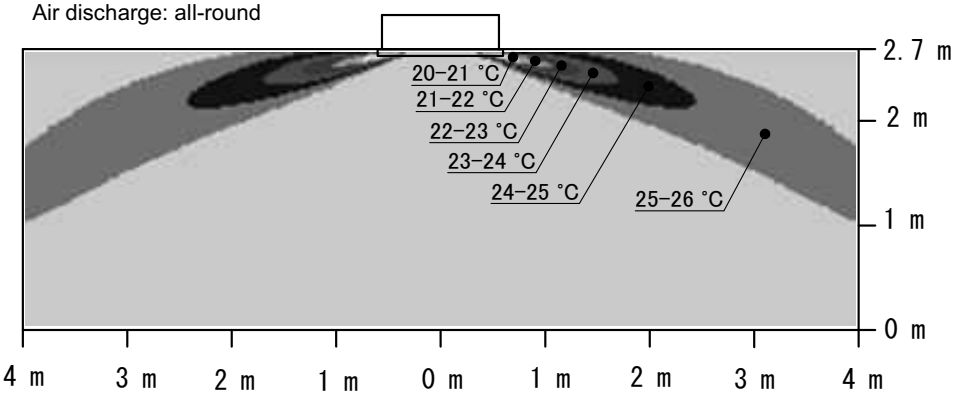

4D083820A

10 Air flow patterns

10 - 1 Air Flow Pattern - Cooling

FFA50A9

Air velocity distribution (cooling)

Air flow direction: horizontal

Air discharge: all-round

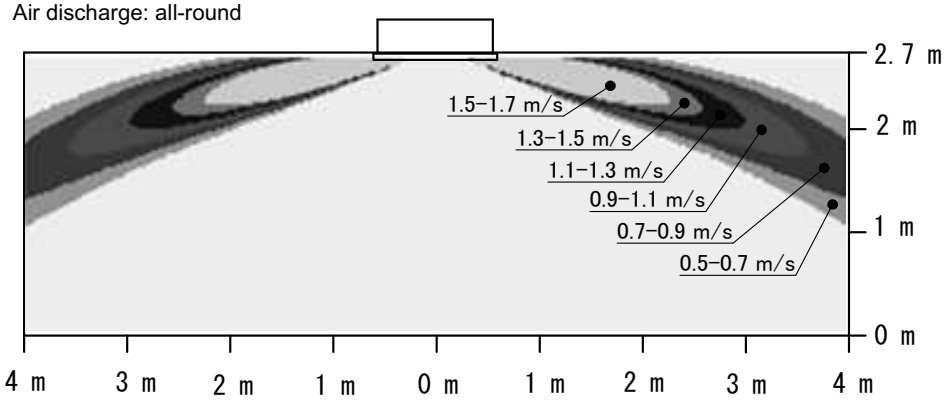

Air temperature distribution (cooling)

Air flow direction: horizontal

Air discharge: all-round

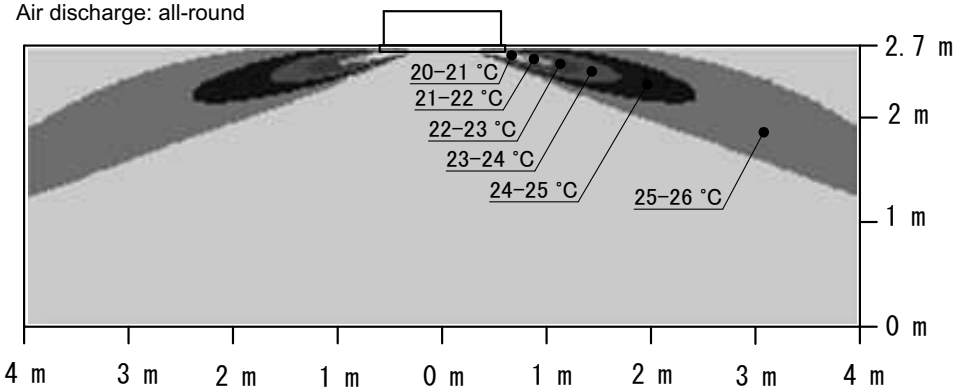

4D083821A

10 Air flow patterns

10 - 1 Air Flow Pattern - Cooling

FFA60A9

Air velocity distribution (cooling)

Air flow direction: horizontal

Air discharge: all-round

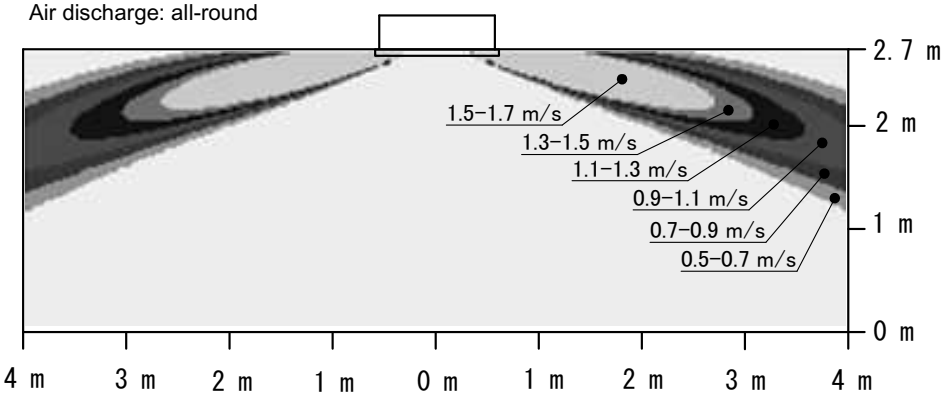

Air temperature distribution (cooling)

Air flow direction: horizontal

Air discharge: all-round

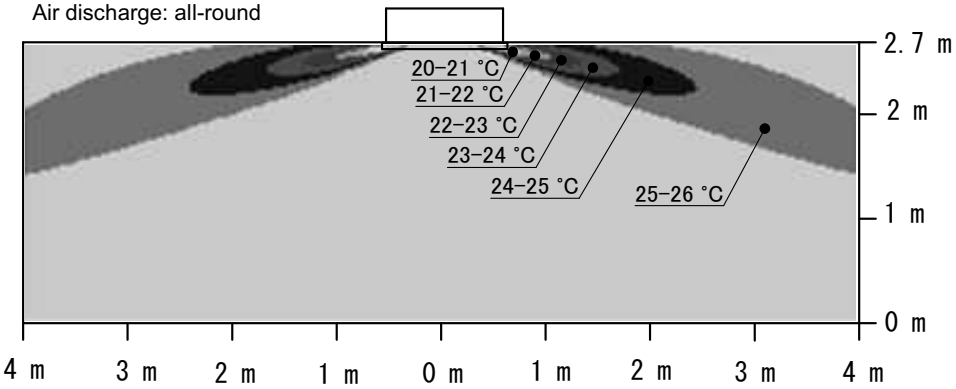

4D083822A

10 Air flow patterns

10 - 2 Air Flow Pattern - Heating

FFA25A9

Air velocity distribution (heating)

Air flow direction: horizontal

Air discharge: all-round

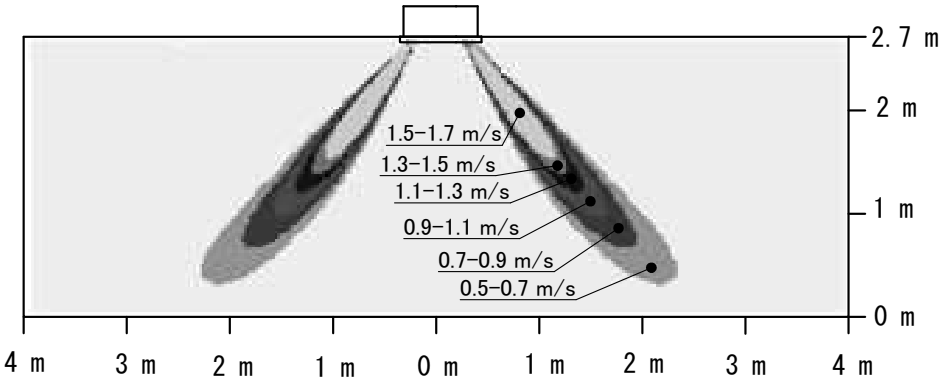

Air temperature distribution (heating)

Air flow direction: horizontal

Air discharge: all-round

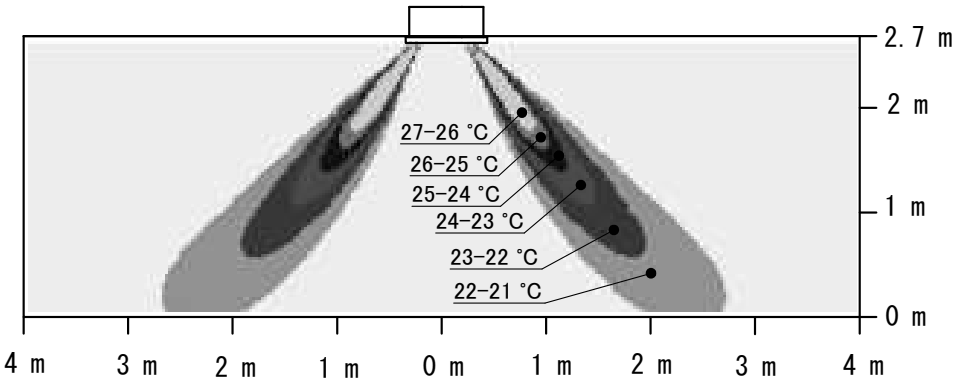

4D083829A

10 Air flow patterns

10 - 2 Air Flow Pattern - Heating

FFA35A9

Air velocity distribution (heating)

Air flow direction: horizontal

Air discharge: all-round

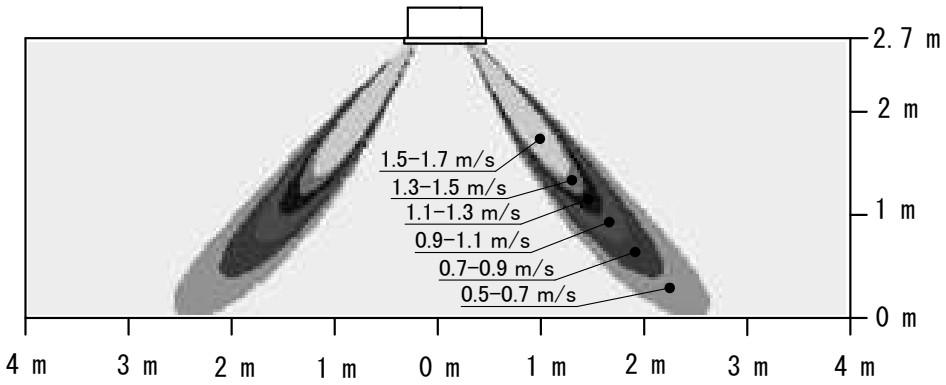

Air temperature distribution (heating)

Air flow direction: horizontal

Air discharge: all-round

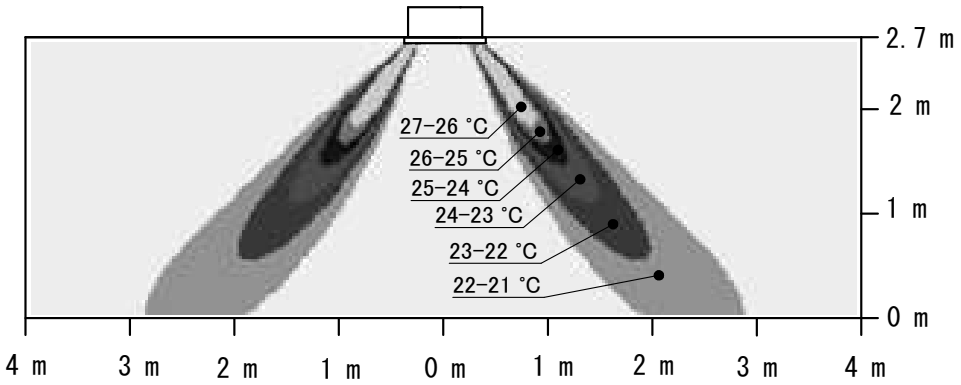

4D083830A

10 Air flow patterns

10 - 2 Air Flow Pattern - Heating

FFA50A9

Air velocity distribution (heating)

Air flow direction: horizontal

Air discharge: all-round

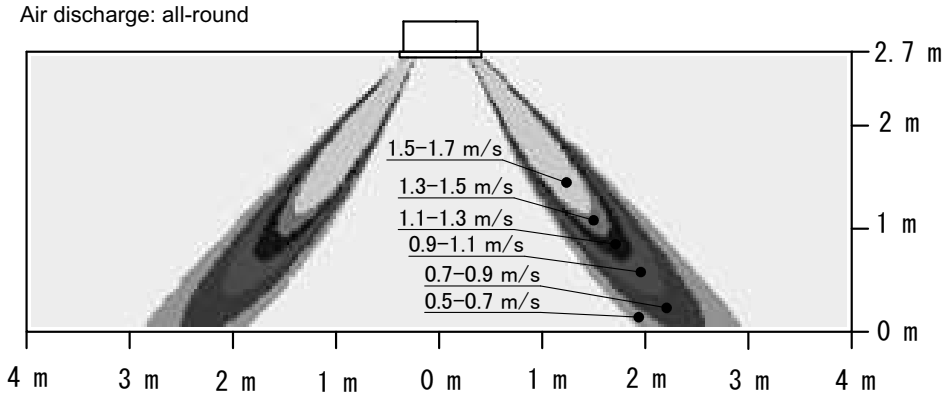

Air temperature distribution (heating)

Air flow direction: horizontal

Air discharge: all-round

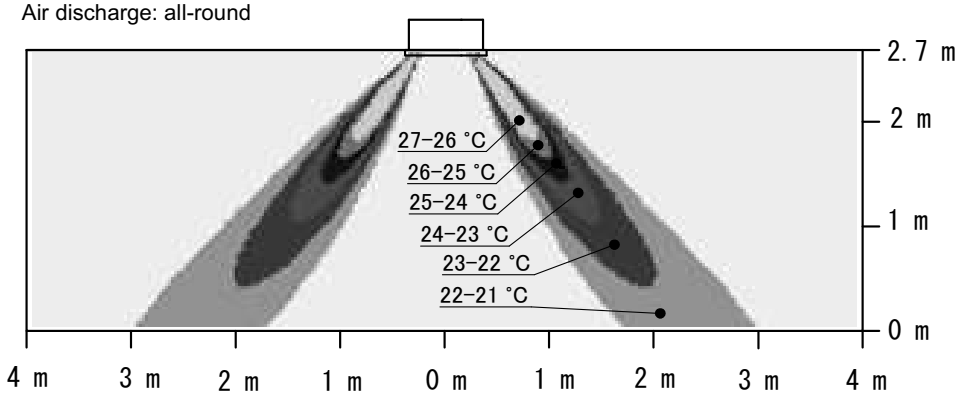

4D083831A

10 Air flow patterns

10 - 2 Air Flow Pattern - Heating

FFA60A9

Air velocity distribution (heating)

Air flow direction: horizontal

Air discharge: all-round

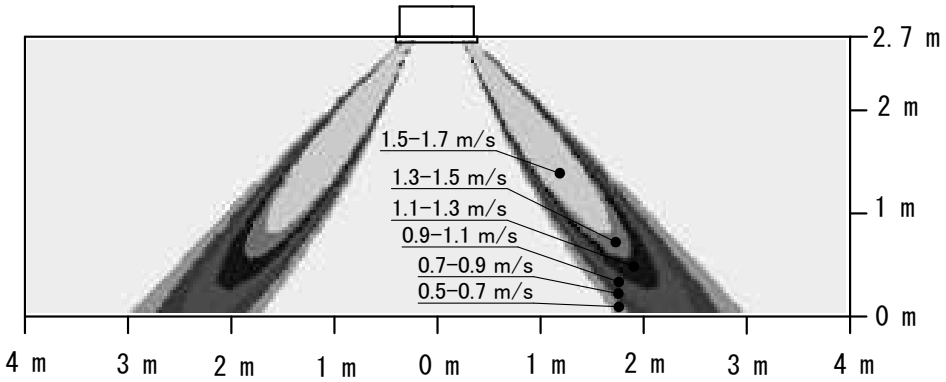

Air temperature distribution (heating)

Air flow direction: horizontal

Air discharge: all-round

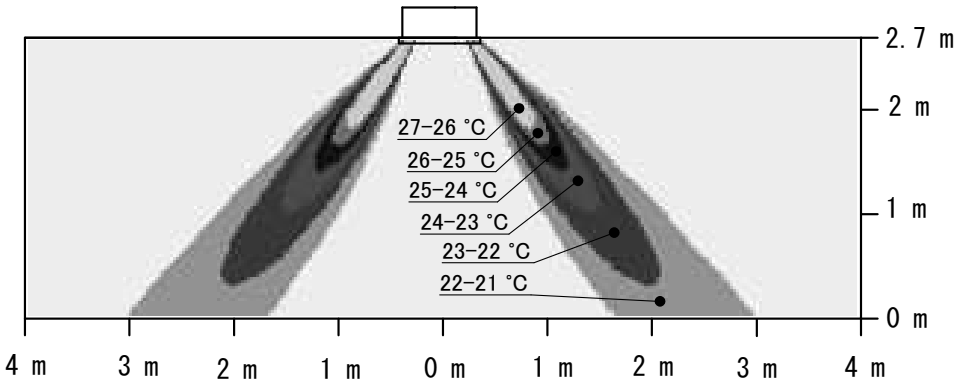

4D083832A

Daikin Europe N.V. Naamloze Vennootschap - Zandvoordestraat 300, B-8400 Oostende - Belgium - www.daikin.eu - BE 0412 120 336 - RPR Oostende

MIX
Paper from responsible sources
FSC® C109049

EEDEN19 11/18

Daikin Europe N.V. participates in the Eurovent Certified Performance programme for Liquid Chilling Packages and Hydronic Heat Pumps, Fan Coil Units and Variable Refrigerant Flow systems. Check ongoing validity of certificate: www.eurovent-certification.com

The present leaflet is drawn up by way of information only and does not constitute an offer binding upon Daikin Europe N.V.. Daikin Europe N.V. has compiled the content of this leaflet to the best of its knowledge. No express or implied warranty is given for the completeness, accuracy, reliability or fitness for particular purpose of its content and the products and services presented therein. Specifications are subject to change without prior notice. Daikin Europe N.V. explicitly rejects any liability for any direct or indirect damage, in the broadest sense, arising from or related to the use and/or interpretation of this leaflet. All content is copyrighted by Daikin Europe N.V.