DAIKIN

technical data

air conditioning systems

RXS-D3VMB

Outdoor Units

Split Sky Air

TABLE OF CONTENTS

RXS-D3VMB

1 Features 2

2 Specifications 3
Nominal Capacity and Nominal Input 3
Technical Specifications 4
Electrical Specifications 5

3 Electrical data 6

4 Capacity tables 12
Cooling/Heating capacity tables 12

5 Dimensional drawing & centre of gravity 21
Dimensional drawing 21
Centre of gravity 22

6 Piping diagram 23

7 Wiring diagram 24
Wiring diagram 24

8 Sound data 25
Sound pressure spectrum 25

9 Operation range 26

1 Features

- Outdoor units for pair application
- Daikin outdoor units are neat and sturdy and can be mounted easily on a roof or terrace or simply placed against an outside wall.
- Outdoor units are fitted with a swing compressor, renowned for its low noise and high energy efficiency

2 Specifications

2-1 NOMINAL CAPACITY AND NOMINAL INPUT				RXS20D3VMB	RXS25D3VMB	RXS35D3VMB
For combination indoor units + outdoor units	Indoor Units			FTXS20D3VMW	FTXS25D3VMW	FTXS35D3VMW
Capacity (Conditions specified in 1)	Cooling	Minimum	kW	1.3	1.3	1.4
		Standard	kW	2.0	2.5	3.4
		Maximum	kW	2.6	3.0	3.8
	Heating	Minimum	kW	1.3	1.3	1.4
		Standard	kW	2.7	3.4	4.0
		Maximum	kW	4.1	4.5	5.0
Nominal input	Cooling	Minimum	kW	0.30	0.30	0.30
		Standard	kW	0.49	0.685	1.045
		Maximum	kW	0.83	0.96	1.27
	Heating	Minimum	kW	0.29	0.29	0.31
		Standard	kW	0.66	0.92	1.155
		Maximum	kW	1.30	1.43	1.56
For combination indoor units + outdoor units	EER	Cooling		4.08	3.65	3.25
	COP	Heating		4.09	3.70	3.46
	Energy Labeling Directive	Cooling		A		
		Heating		A	A	B
	Annual energy consumption		kWh	245	343	523
	Indoor Units			FTXS20D3VML	FTXS25D3VML	FTXS35D3VML
Capacity (Conditions specified in 1)	Cooling	Minimum	kW	1.3	1.3	1.4
		Standard	kW	2.0	2.5	3.4
		Maximum	kW	2.6	3.0	3.8
	Heating	Minimum	kW	1.3	1.3	1.4
		Standard	kW	2.7	3.4	4.0
		Maximum	kW	4.1	4.5	5.0
Nominal input	Cooling	Minimum	kW	0.30	0.30	0.30
		Standard	kW	0.49	0.685	1.045
		Maximum	kW	0.83	0.96	1.27
	Heating	Minimum	kW	0.29	0.29	0.31
		Standard	kW	0.66	0.92	1.155
		Maximum	kW	1.30	1.43	1.56
For combination indoor units + outdoor units	EER	Cooling		4.08	3.65	3.25
	COP	Heating		4.09	3.70	3.46
	Energy Labeling Directive	Cooling		A		
		Heating		A	A	B
	Annual energy consumption		kWh	245	343	523
	Indoor Units				FLXS25BAVMB	FLXS35BAVMB
Capacity (Conditions specified in 1)	Cooling	Minimum	kW		1.30	1.4
		Standard	kW		2.50	3.5
		Maximum	kW		3.00	3.8
	Heating	Minimum	kW		1.30	1.4
		Standard	kW		3.40	4.0
		Maximum	kW		4.50	5.0
Nominal input	Cooling	Minimum	kW		0.30	0.30
		Standard	kW		0.78	1.16
		Maximum	kW		0.96	1.27
	Heating	Minimum	kW		0.29	0.31
		Standard	kW		0.995	1.245
		Maximum	kW		1.50	1.86
For combination indoor units + outdoor units	EER	Cooling			3.21	3.02
	COP	Heating			3.42	3.21
	Energy Labeling Directive	Cooling			A	B
		Heating			B	C
	Annual energy consumption		kWh		390	580
	Indoor Units				FVXS25BAVMB	FVXS35BAVMB
Capacity (Conditions specified in 1)	Cooling	Standard	kW		2.50	3.50
	Heating	Standard	kW		3.40	4.50

2 Specifications

2-1 NOMINAL CAPACITY AND NOMINAL INPUT				RXS20D3VMB	RXS25D3VMB	RXS35D3VMB
Nominal input	Cooling	Standard	kW		0.70	1.09
	Heating	Standard	kW		0.90	1.32
For combination indoor units + outdoor units	EER	Cooling			3.57	3.21
	COP	Heating			3.78	3.41
	Energy Labeling Directive	Cooling			A	A
		Heating			A	B
	Annual energy consumption		kWh		350	545
	Indoor Units				FDXS25EAVMB	FDXS35EAVMB
Capacity (Conditions specified in 1)	Cooling	Minimum	kW		1.30	1.4
		Standard	kW		2.40	3.4
		Maximum	kW		3.00	3.8
	Heating	Minimum	kW		1.30	1.4
		Standard	kW		3.20	4.1
		Maximum	kW		4.50	5.0
Nominal input	Cooling	Minimum	kW		0.30	0.30
		Standard	kW		0.845	1.30
		Maximum	kW		1.06	1.455
	Heating	Minimum	kW		0.29	0.31
		Standard	kW		0.935	1.44
		Maximum	kW		1.50	1.56
For combination indoor units + outdoor units	EER	Cooling			2.84	2.62
	COP	Heating			3.42	2.85
	Energy Labeling Directive	Cooling			C	D
		Heating			B	D
	Annual energy consumption		kWh		423	650

2-2 TECHNICAL SPECIFICATIONS				RXS20D3VMB	RXS25D3VMB	RXS35D3VMB
Casing	Colour			Ivory White		
Dimensions	Unit	Height	mm	550	550	550
		Width	mm	765	765	765
		Depth	mm	285	285	285
	Packing	Height	mm	589	589	589
		Width	mm	882	882	882
		Depth	mm	363	363	363
Weight	Unit		kg	30	30	32
	Packed Unit		kg	35	35	38
Heat Exchanger	Dimensions	Length	mm	828	828	805
		Nr of Rows		1	1	2
		Fin Pitch	mm	1.40	1.40	1.40
		Nr of Stages		24	24	24
	Tube type			Hi-Xa(7)		
	Fin	Type		Waffle fin		
		Treatment		Anti-corrosion treatment (PE)		
Fan	Type			Propeller		
	Quantity			1	1	1
	Air Flow Rate (nominal at 230V)	Cooling	m³/min	36.2	36.2	33.5
		Heating	m³/min	32.6	32.6	30.2
	Motor	Quantity		1	1	1
		Model		D23B-28		
Motor	Speed (nominal)	Cooling	rpm	860	860	860
		Heating	rpm	860	860	860
Fan	Motor	Output	W	50	50	50
Compressor	Quantity			1	1	1
	Motor	Model		1YC23NXD#A		
		Type		Hermetically sealed swing compressor		
		Motor Output	W	600	600	600

2 Specifications

2-2 TECHNICAL SPECIFICATIONS				RXS20D3VMB	RXS25D3VMB	RXS35D3VMB
Operation Range	Cooling	Min	°CDB	-10.0	-10.0	-10.0
		Max	°CDB	46.0	46.0	46.0
	Heating	Min	°CWB	-15	-15	-15
		Max	°CWB	20	20	20
Sound Level (nominal)	Cooling	Sound Power	dBA	61.0	61.0	62.0
		Sound Pressure	dBA	46.0	46.0	47.0
	Heating	Sound Pressure	dBA	47.0	47.0	48.0
Refrigerant	Type			R-410A		
	Charge		kg	0.8	0.8	1.0
Refrigerant Oil	Type			FVC50K		
	Charged Volume		l	0.375	0.375	0.375
Piping connections	Liquid (OD)	Diameter (OD)	mm	6.35		
	Gas	Diameter (OD)	mm	9.5		
	Drain	Diameter (OD)	mm	18	18	18
	Piping Length	Maximum	m	20	20	20
	Additional Refrigerant Charge		kg/m	0.02/>10	0.02/>10m	0.02/>10m
	Max. internunit level difference		m	15.0	15.0	15.0
	Heat Insulation			Both liquid and gas pipes		
Standard Accessories	Item			Drain plug	Installation manual	Installation manual
	Quantity			1	1	1
	Item			Installation manual	Drain plug	Drain plug
	Quantity			1	1	1
Notes				Nominal cooling capacities are based on : indoor temperature : 27°CDB, 19°CWB, outdoor temperature : 35°CDB, equivalent refrigerant piping : 7.5m, level difference : 0m.		
				Nominal heating capacities are based on : indoor temperature : 20°CDB, outdoor temperature : 7°CDB, 6°CWB, equivalent refrigerant piping : 7.5m, level difference : 0m		
				Sound levels are measured in an anechoic room		
				Sound pressure level is a relative value, depending on the distance and acoustic environment. For more details, please refer to sound level drawings of this chapter.		
				The sound power level is an absolute value indicating the power which a sound source generates.		

2-3 ELECTRICAL SPECIFICATIONS				RXS20D3VMB	RXS25D3VMB	RXS35D3VMB
Power Supply	Name			VM		
	Phase			1		
	Frequency		Hz	50	50	50
	Voltage		V	230	230	230
	Voltage range	Minimum	V	-10%		
		Maximum	V	+10%		
Current	Nominal Running Current	Cooling (A)	A	2.54	3.64	4.62
		Heating (A)	A	3.44	4.14	5.12
	Starting current (cooling/heating)		A	3.6	4.3	5.3
Wiring connections	For Power Supply	Quantity		3	3	3
	For connection with indoor	Quantity		4	4	4
		Remark		included earth wiring		
Power Supply Intake				Outdoor unit only		

3 Electrical data

RXS+FTXS20C

Indoor unit	Outdoor unit	Power supply				Compressor		OFM		IFM	
		Hz-Volts	Voltage range	MCA	MFA	RHz	RLA	W	FLA	W	FLA
FTXS20CVMB	RXS20CVMB	50-230	MAX. 50Hz 253V MIN. 50Hz 207V	12	15	38	2.8	31	0.20	18	0.20

3D044114

SYMBOLS

MCA : Min. Circuit Amps (A)
MFA : Max. Fuse Amps (A)
RHz : Rated operating frequency(Hz)
RLA : Rated Load Amps (A)
OFM : Outdoor Fan Motor
IFM : Indoor Fan Motor
FLA : Full Load Amps
W : Rated motor output (W)

NOTES

1. RLA is based on the following conditions:
   Indoor temp.: 27°CDB/19.0°CWB
   Outdoor temp. : 35°CDB
2. Maximum allowable voltage unbalance between phases is 2%
3. Select wire size based on the larger value of MCA.
4. Instead of fuse, use circuit breaker.
5. For more details concerning conditional connections, see http://extranet.daikineurope.com, select "E-Data Books". Finally, click on the document title of your choice.

RXS20D-FTXS

Unit combination		Power supply				Compressor		OFM		IFM	
Indoor unit	Outdoor unit	Hz-Volts	Voltage range	MCA	MFA	RHz	RLA	kW	FLA	kW	FLA
FTXS20DW FTXS20DL	RXS20D	50-230	Max. 50Hz 253V Min. 50Hz 207V	12	16	37	2.2	0.031	0.20	0.038	0.14

3D048185A

SYMBOLS

MCA : Min. Circuit Amps (A)
MFA : Max. Fuse Amps (A)
RLA : Rated Load Amps (A)
OFM : Outdoor Fan Motor
IFM : Indoor Fan Motor
FLA : Full Load Amps (A)
kW : Fan Motor Rated Output (kW)
RHz : Rated operating frequency (Hz)

NOTES

1. RLA is based on the following conditions:
   Indoor temp.: 27°CDB/19.0°CWB
   Outdoor temp. : 35°CDB
2. Maximum allowable voltage unbalance between phases is 2%
3. Select wire size based on the larger value of MCA or TOCA
4. Instead of fuse, use circuit breaker.
5. For more details concerning conditional connections, see http://extranet.daikineurope.com, select "E-Data Books". Finally, click on the document title of your choice.

3 Electrical data

RXS+FTXS25C

Indoor unit	Outdoor unit	Power supply				Compressor		OFM		IFM	
		Hz-Volts	Voltage range	MCA	MFA	RHz	RLA	W	FLA	W	FLA
FTXS25CVMB	RXS25CVMB	50-230	MAX. 50Hz 253V MIN. 50Hz 207V	12	15	51	3.9	31	0.20	18	0.20

3D044115

SYMBOLS

MCA : Min. Circuit Amps (A)
MFA : Max. Fuse Amps (A)
RHz : Rated operating frequency(Hz)
RLA : Rated Load Amps (A)
OFM : Outdoor Fan Motor
IFM : Indoor Fan Motor
FLA : Full Load Amps
W : Rated motor output (W)

NOTES

1. RLA is based on the following conditions:
   Indoor temp.: 27°CDB/19.0°CWB
   Outdoor temp. : 35°CDB
2. Maximum allowable voltage unbalance between phases is 2%
3. Select wire size based on the larger value of MCA.
4. Instead of fuse, use circuit breaker.
5. For more details concerning conditional connections, see http://extranet.daikineurope.com, select "E-Data Books". Finally, click on the document title of your choice.

RXS25D-FTXS25D

Unit combination		Power supply				Compressor		OFM		IFM	
Indoor unit	Outdoor unit	Hz-Volts	Voltage range	MCA	MFA	RHz	RLA	kW	FLA	kW	FLA
FTXS25DW FTXS25DL	RXS25D	50-230	Max. 50Hz 253V Min. 50Hz 207V	12	16	52	3.3	0.031	0.20	0.038	0.14

3D048186A

SYMBOLS

MCA : Min. Circuit Amps (A)
MFA : Max. Fuse Amps (A)
RLA : Rated Load Amps (A)
OFM : Outdoor Fan Motor
IFM : Indoor Fan Motor
FLA : Full Load Amps (A)
kW : Fan Motor Rated Output (kW)
RHz : Rated operating frequency (Hz)

NOTES

1. RLA is based on the following conditions:
   Indoor temp.: 27°CDB/19.0°CWB
   Outdoor temp. : 35°CDB
2. Maximum allowable voltage unbalance between phases is 2%
3. Select wire size based on the larger value of MCA.
4. Instead of fuse, use circuit breaker.
5. For more details concerning conditional connections, see http://extranet.daikineurope.com, select "E-Data Books". Finally, click on the document title of your choice.

3 Electrical data

RXS+FLXS25B

Indoor unit	Outdoor unit	Power supply				Compressor		OFM		IFM	
		Hz-Volts	Voltage range	MCA	MFA	RHz	RLA	W	FLA	W	FLA
FLXS25BVMB	RXS25BVMB	50-230	MAX. 50Hz 53V MIN. 50Hz 207V	15	15	48	3.17	19	0.35	34	0.34

3D040395

SYMBOLS

MCA : Min. Circuit Amps (A)
MFA : Max. Fuse Amps (A)
RHz : Rated operating frequency(Hz)
RLA : Rated Load Amps (A)
OFM : Outdoor Fan Motor
IFM : Indoor Fan Motor
FLA : Full Load Amps
W : Rated motor output (W)

NOTES

1. RLA is based on the following conditions:
   Indoor temp.: 27°CDB/19.0°CWB
   Outdoor temp. : 35°CDB
2. Maximum allowable voltage unbalance between phases is 2%
3. Select wire size based on the larger value of MCA.
4. Instead of fuse, use circuit breaker.
5. For more details concerning conditional connections, see http://extranet.daikineurope.com, select "E-Data Books". Finally, click on the document title of your choice.

RXS+FVXS25B

Indoor unit	Outdoor unit	Power supply				Compressor		OFM		IFM	
		Hz-Volts	Voltage range	MCA	MFA	RHz	RLA	W	FLA	W	FLA
FVXS25BVMB	RXS25BVMB	50-230	MAX. 50Hz 253V MIN. 50Hz 207V	15	15	49	3.25	19	0.35	28	0.16

3D040399

SYMBOLS

MCA : Min. Circuit Amps (A)
MFA : Max. Fuse Amps (A)
RHz : Rated operating frequency(Hz)
RLA : Rated Load Amps (A)
OFM : Outdoor Fan Motor
IFM : Indoor Fan Motor
FLA : Full Load Amps
W : Rated motor output (W)

NOTES

1. RLA is based on the following conditions:
   Indoor temp.: 27°CDB/19.0°CWB
   Outdoor temp. : 35°CDB
2. Maximum allowable voltage unbalance between phases is 2%
3. Select wire size based on the larger value of MCA.
4. Instead of fuse, use circuit breaker.
5. For more details concerning conditional connections, see http://extranet.daikineurope.com, select "E-Data Books". Finally, click on the document title of your choice.

3 Electrical data

RXS20,35D-FDXS

Unit combination		Power supply				Compressor		OFM		IFM	
Indoor unit	Outdoor unit	Hz-Volts	Voltage range	MCA	MFA	RHz	RLA	kW	FLA	kW	FLA
FDXS25C	RXS25D	50-230	Max. 50Hz 253V Min. 50Hz 207V	12	16	54	4.1	0.037	0.17	0.062	0.6
FDKS35C	RXS35D	50-230	Max. 50Hz 253V Min. 50Hz 207V	12	16	90	5.5	0.037	0.17	0.062	0.6

3D040596C

SYMBOLS

MCA : Min. Circuit Amps (A)
MFA : Max. Fuse Amps (A)
RLA : Rated Load Amps (A)
OFM : Outdoor Fan Motor
IFM : Indoor Fan Motor
FLA : Full Load Amps (A)
kW : Fan Motor Rated Output (kW)
RHz : Rated operating frequency (Hz)

NOTES

1. RLA is based on the following conditions:
   Indoor temp.: 27°CDB/19.0°CWB
   Outdoor temp. : 35°CDB
2. Maximum allowable voltage unbalance between phases is 2%
3. Select wire size based on the larger value of MCA or TOCA
4. Instead of fuse, use circuit breaker.
5. For more details concerning conditional connections, see http://extranet.daikineurope.com, select "E-Data Books". Finally, click on the document title of your choice.

RXS+FTXS35C

Indoor unit	Outdoor unit	Power supply				Compressor		OFM		IFM	
		Hz-Volts	Voltage range	MCA	MFA	RHz	RLA	W	FLA	W	FLA
FTXS35CVMB	RXS35CVMB	50-230	MAX. 50Hz 253V MIN. 50Hz 207V	12	15	77	4.9	35	0.22	18	0.20

3D044116

SYMBOLS

MCA : Min. Circuit Amps (A)
MFA : Max. Fuse Amps (A)
RHz : Rated operating frequency(Hz)
RLA : Rated Load Amps (A)
OFM : Outdoor Fan Motor
IFM : Indoor Fan Motor
FLA : Full Load Amps
W : Rated motor output (W)

NOTES

1. RLA is based on the following conditions:
   Indoor temp.: 27°CDB/19.0°CWB
   Outdoor temp. : 35°CDB
2. Maximum allowable voltage unbalance between phases is 2%
3. Select wire size based on the larger value of MCA.
4. Instead of fuse, use circuit breaker.
5. For more details concerning conditional connections, see http://extranet.daikineurope.com, select "E-Data Books". Finally, click on the document title of your choice.

3 Electrical data

RXS35D-FTXS35D

Unit combination		Power supply				Compressor		OFM		IFM	
Indoor unit	Outdoor unit	Hz-Volts	Voltage range	MCA	MFA	RHz	RLA	kW	FLA	kW	FLA
FTXS35DW FTXS35DL	RXS35D	50-230	Max. 50Hz 253V Min. 50Hz 207V	12	16	76	4.3	0.035	0.22	0.038	0.14

3D048187A

SYMBOLS

MCA : Min. Circuit Amps (A)
MFA : Max. Fuse Amps (A)
RLA : Rated Load Amps (A)
OFM : Outdoor Fan Motor
IFM : Indoor Fan Motor
FLA : Full Load Amps (A)
kW : Fan Motor Rated Output (kW)
RHz : Rated operating frequency (Hz)

NOTES

1. RLA is based on the following conditions:
   Indoor temp.: 27°CDB/19.0°CWB
   Outdoor temp. : 35°CDB
2. Maximum allowable voltage unbalance between phases is 2%
3. Select wire size based on the larger value of MCA.
4. Instead of fuse, use circuit breaker.
5. For more details concerning conditional connections, see http://extranet.daikineurope.com, select "E-Data Books". Finally, click on the document title of your choice.

RXS+FLXS35B

Indoor unit	Outdoor unit	Power supply				Compressor		OFM		IFM	
		Hz-Volts	Voltage range	MCA	MFA	RHz	RLA	W	FLA	W	FLA
FLXS35BVMB	RXS35BVMB	50-230	MAX. 50Hz 253V MIN. 50Hz 207V	15	15	81	5.03	19	0.35	34	0.38

3D040396

SYMBOLS

MCA : Min. Circuit Amps (A)
MFA : Max. Fuse Amps (A)
RHz : Rated operating frequency(Hz)
RLA : Rated Load Amps (A)
OFM : Outdoor Fan Motor
IFM : Indoor Fan Motor
FLA : Full Load Amps
W : Rated motor output (W)

NOTES

1. RLA is based on the following conditions:
   Indoor temp.: 27°CDB/19.0°CWB
   Outdoor temp. : 35°CDB
2. Maximum allowable voltage unbalance between phases is 2%
3. Select wire size based on the larger value of MCA.
4. Instead of fuse, use circuit breaker.
5. For more details concerning conditional connections, see http://extranet.daikineurope.com, select "E-Data Books". Finally, click on the document title of your choice.

3 Electrical data

RXS+FVXS35B

Indoor unit	Outdoor unit	Power supply				Compressor		OFM		IFM	
		Hz-Volts	Voltage range	MCA	MFA	RHz	RLA	W	FLA	W	FLA
FVXS35BVMB	RXS35BVMB	50-230	MAX. 50Hz 253V MIN. 50Hz 207V	15	15	82	5.05	19	0.35	28	0.16

3D040400

3

SYMBOLS

MCA : Min. Circuit Amps (A)
MFA : Max. Fuse Amps (A)
RHz : Rated operating frequency(Hz)
RLA : Rated Load Amps (A)
OFM : Outdoor Fan Motor
IFM : Indoor Fan Motor
FLA : Full Load Amps
W : Rated motor output (W)

NOTES

1. RLA is based on the following conditions:
   Indoor temp.: 27°CDB/19.0°CWB
   Outdoor temp. : 35°CDB
2. Maximum allowable voltage unbalance between phases is 2%
3. Select wire size based on the larger value of MCA.
4. Instead of fuse, use circuit breaker.
5. For more details concerning conditional connections, see http://extranet.daikineurope.com, select "E-Data Books". Finally, click on the document title of your choice.

4 Capacity tables

4 - 1 Cooling/Heating capacity tables

4

RXS20D-FTXS

Cooling capacity (50 Hz, 230 V)

Indoor		Outdoor temperature (°CDB)																	
EWB (°C)	EDB (°C)	20			25			30			32			35			40		
		TC	SHC	PI	TC	SHC	PI	TC	SHC	PI	TC	SHC	PI	TC	SHC	PI	TC	SHC	PI
14.0	20.0	2.05	1.70	0.38	1.96	1.66	0.41	1.86	1.62	0.45	1.83	1.60	0.46	1.77	1.57	0.48	1.68	1.53	0.52
16.0	22.0	2.14	1.68	0.38	2.05	1.63	0.41	1.95	1.59	0.45	1.92	1.58	0.47	1.86	1.55	0.49	1.77	1.51	0.52
18.0	25.0	2.23	1.78	0.38	2.14	1.74	0.42	2.05	1.71	0.45	2.01	1.69	0.47	1.95	1.67	0.49	1.86	1.63	0.53
19.0	27.0	2.28	1.90	0.38	2.19	1.87	0.42	2.09	1.83	0.45	2.06	1.82	0.47	2.00	1.79	0.49	1.91	1.76	0.53
22.0	30.0	2.42	1.84	0.38	2.32	1.81	0.42	2.23	1.78	0.46	2.19	1.77	0.47	2.147	1.75	0.49	2.05	1.72	0.53
24.0	32.0	2.51	1.80	0.39	2.42	1.77	0.42	2.32	1.75	0.46	2.29	1.73	0.47	2.23	1.725	0.50	2.14	1.69	0.53

Heating capacity (50 Hz, 230 V)

Indoor	Outdoor temperature (°CDB)									
EDB (°C)	-10		-5		0		6		10	
	TC	PI	TC	PI	TC	PI	TC	PI	TC	PI
15.0	1.82	0.56	2.12	0.59	2.43	0.61	2.79	0.65	3.04	0.67
20.0	1.72	0.57	2.03	0.60	2.33	0.63	2.70	0.66	2.94	0.68
22.0	1.69	0.58	1.99	0.61	2.30	0.63	2.66	0.67	2.91	0.69
24.0	1.65	0.58	1.95	0.61	2.26	0.64	2.63	0.67	2.87	0.69
25.0	1.63	0.59	1.94	0.62	2.24	0.64	2.61	0.67	2.85	0.70
27.0	1.59	0.59	1.90	0.62	2.20	0.65	2.57	0.68	2.81	0.70

SYMBOLS

AFR: Air flow rate [m³/min.]
BF: Bypass factor
EWB: Entering wet bulb temp. [°CWB]
EDB: Entering dry bulb temp. [°CDB]
TC: Total capacity cooling [kW]
SHC: Sensible heat capacity [kW]
PI: Power input [kW]

NOTES

1 Ratings shown are net capacities which include a deduction for indoor fan motor heat.

2 ☐ shows nominal (rated) capacities and power input.

3 TC, PI and SHC must be calculated by interpolation using the figures in the above tables. (Figures out of the tables should not be used for calculation).

4 SHC is based on each EWB and EDB.
SHC1 for any indoor dry-bulb temperatures (EDB1) shall be calculated by the following formula.
SHC*
= correction value of SHC matched with the differential of EDB and EDB1.
= 0.02 x AFR [m3/min.] x (1-BF) x (EDB1-EDB)
The calculation value of SHC1 = SHC + SHC*

5 Capacities are based on the folowing conditions.
Corresponding refrigerant piping length: 5m
Level difference: 0m

6 Air flow rate (AFR) and Bypass factor (BF) are tabulated below.

	FI	
	Cooling	Heating
AFR	8.7	9.4
BF	0.21	

3D048103

4 Capacity tables

4 - 1 Cooling/Heating capacity tables

RXS25D-FTXS

Cooling capacity (50 Hz, 230 V)

Indoor		Outdoor temperature (°CDB)																	
EWB (°C)	EDB (°C)	20			25			30			32			35			40		
		TC	SHC	PI	TC	SHC	PI	TC	SHC	PI	TC	SHC	PI	TC	SHC	PI	TC	SHC	PI
14.0	20.0	2.56	1.93	0.53	2.44	1.87	0.58	2.33	1.82	0.63	2.28	1.79	0.65	2.21	1.76	0.68	2.10	1.70	0.73
16.0	22.0	2.68	1.90	0.53	2.56	1.84	0.58	2.44	1.79	0.63	2.40	1.77	0.65	2.33	1.74	0.68	2.21	1.69	0.73
18.0	25.0	2.79	1.99	0.53	2.68	1.94	0.58	2.56	1.89	0.63	2.51	1.87	0.65	2.44	1.84	0.68	2.33	1.80	0.73
19.0	27.0	2.85	2.11	0.53	2.73	2.06	0.58	2.62	2.01	0.63	2.57	1.99	0.65	2.50	1.96	0.69	2.38	1.92	0.74
22.0	30.0	3.02	2.03	0.54	2.91	1.99	0.59	2.79	1.95	0.64	2.74	1.93	0.66	2.67	1.94	0.69	2.56	1.86	0.74
24.0	32.0	3.14	1.98	0.54	3.02	1.94	0.59	2.90	1.90	0.64	2.86	1.89	0.66	2.79	1.86	0.69	2.67	1.83	0.74

Heating capacity (50 Hz, 230 V)

Indoor	Outdoor temperature (°CDB)									
EDB (°C)	-10		-5		0		6		10	
	TC	PI	TC	PI	TC	PI	TC	PI	TC	PI
15.0	2.29	0.84	2.67	0.88	3.06	0.92	3.52	0.90	3.82	0.93
20.0	2.17	0.80	2.56	0.84	2.94	0.87	3.40	0.92	3.71	0.95
22.0	2.12	0.81	2.51	0.84	2.89	0.88	3.35	0.93	3.66	0.96
24.0	2.08	0.82	2.46	0.85	2.85	0.89	3.31	0.94	3.61	0.97
25.0	2.05	0.82	2.44	0.86	2.82	0.90	3.28	0.94	3.59	0.97
27.0	2.01	0.83	2.39	0.87	2.77	0.90	3.24	0.95	3.54	0.98

SYMBOLS

AFR: Air flow rate [m³/min.]
BF: Bypass factor
EWB: Entering wet bulb temp. [°CWB]
EDB: Entering dry bulb temp. [°CDB]
TC: Total capacity cooling [kW]
SHC: Sensible heat capacity [kW]
PI: Power input [kW]

NOTES

1 Ratings shown are net capacities which include a deduction for indoor fan motor heat.

2 ☐ shows nominal (rated) capacities and power input.

3 TC, PI and SHC must be calculated by interpolation using the figures in the above tables. (Figures out of the tables should not be used for calculation).

4 SHC is based on each EWB and EDB.
SHC1 for any indoor dry-bulb temperatures (EDB1) shall be calculated by the following formula.
SHC*
= correction value of SHC matched with the differential of EDB and EDB1.
= 0.02 x AFR [m3/min.] x (1-BF) x (EDB1-EDB)
The calculation value of SHC1 = SHC + SHC*

5 Capacities are based on the folowing conditions.
Corresponding refrigerant piping length: 7.5m
Level difference: 0m

6 Air flow rate (AFR) and Bypass factor (BF) are tabulated below.

	FI	
	Cooling	Heating
AFR	8.7	9.4
BF	0.24	

3D048106

4 Capacity tables

4 - 1 Cooling/Heating capacity tables

RXS25D-FLXS

Cooling capacity (50 Hz, 230 V)

Indoor		Outdoor temperature (°CDB)																	
EWB (°C)	EDB (°C)	20			25			30			32			35			40		
		TC	SHC	PI	TC	SHC	PI	TC	SHC	PI	TC	SHC	PI	TC	SHC	PI	TC	SHC	PI
14.0	20.0	2.52	1.77	0.59	2.44	1.73	0.66	2.33	1.67	0.71	2.28	1.65	0.74	2.21	1.61	0.77	2.10	1.55	0.83
16.0	22.0	2.68	1.76	0.60	2.56	1.71	0.66	2.44	1.65	0.72	2.40	1.63	0.74	2.33	1.59	0.77	2.21	1.54	0.83
18.0	25.0	2.79	1.83	0.61	2.68	1.78	0.66	2.56	1.72	0.72	2.51	1.70	0.74	2.44	1.67	0.78	2.33	1.62	0.84
19.0	27.0	2.85	1.91	0.61	2.73	1.86	0.66	2.62	1.81	0.72	2.57	1.79	0.75	2.50	1.76	0.78	2.38	1.71	0.84
22.0	30.0	3.02	1.84	0.61	2.91	1.79	0.67	2.79	1.75	0.73	2.74	1.73	0.75	2.67	1.70	0.79	2.56	1.66	0.84
24.0	32.0	3.14	1.79	0.62	3.02	1.74	0.67	2.90	1.70	0.73	2.86	1.68	0.75	2.79	1.66	0.79	2.67	1.62	0.85

Heating capacity (50 Hz, 230 V)

Indoor	Outdoor temperature (°CDB)									
EDB (°C)	-10		-5		0		6		10	
	TC	PI	TC	PI	TC	PI	TC	PI	TC	PI
15.0	2.29	0.84	2.67	0.88	3.06	0.92	3.52	0.97	3.82	1.01
20.0	2.17	0.86	2.56	0.90	2.94	0.95	3.40	1.00	3.71	1.03
22.0	2.12	0.84	2.51	0.91	2.89	0.95	3.35	1.00	3.66	1.04
24.0	2.08	0.88	2.46	0.92	2.85	0.96	3.31	1.01	3.61	1.05
25.0	2.05	0.89	2.44	0.93	2.82	0.97	3.28	1.02	3.59	1.05
27.0	2.01	0.90	2.39	0.94	2.77	0.98	3.24	1.03	3.54	1.06

SYMBOLS

AFR: Air flow rate [m³/min.]
BF: Bypass factor
EWB: Entering wet bulb temp. [°CWB]
EDB: Entering dry bulb temp. [°CDB]
TC: Total capacity cooling [kW]
SHC: Sensible heat capacity [kW]
PI: Power input [kW]

NOTES

1 Ratings shown are net capacities which include a deduction for indoor fan motor heat.

2 [ ] shows nominal (rated) capacities and power input.

3 TC, PI and SHC must be calculated by interpolation using the figures in the above tables. (Figures out of the tables should not be used for calculation).

4 SHC is based on each EWB and EDB.
SHC1 for any indoor dry-bulb temperatures (EDB1) shall be calculated by the following formula.
SHC*
= correction value of SHC matched with the differential of EDB and EDB1.
= 0.02 x AFR [m3/min.] x (1-BF) x (EDB1-EDB)
The calculation value of SHC1 = SHC + SHC*

5 Capacities are based on the folowing conditions.
Corresponding refrigerant piping length: 7.5m
Level difference: 0m

6 Air flow rate (AFR) and Bypass factor (BF) are tabulated below.

	FI	
	Cooling	Heating
AFR	7.6	9.2
BF	0.32	

3D048350

4 Capacity tables

4 - 1 Cooling/Heating capacity tables

RXS25D-FVXS

Cooling capacity (50 Hz, 230 V)

Indoor		Outdoor temperature (°CDB)																	
EWB (°C)	EDB (°C)	20			25			30			32			35			40		
		TC	SHC	PI	TC	SHC	PI	TC	SHC	PI	TC	SHC	PI	TC	SHC	PI	TC	SHC	PI
14.0	20.0	2.56	1.85	0.53	2.44	1.79	0.58	2.33	1.73	0.64	2.28	1.70	0.66	2.21	1.67	0.69	2.10	1.61	0.74
16.0	22.0	2.68	1.81	0.54	2.56	1.76	0.59	2.44	1.70	0.64	2.40	1.68	0.66	2.33	1.65	0.69	2.21	1.59	0.74
18.0	25.0	2.79	1.89	0.54	2.68	1.84	0.59	2.56	1.79	0.64	2.51	1.77	0.66	2.44	1.74	0.69	2.33	1.68	0.74
19.0	27.0	2.85	1.99	0.54	2.73	1.93	0.59	2.62	1.88	0.64	2.57	1.87	0.66	2.50	1.84	0.70	2.38	1.79	0.75
22.0	30.0	3.02	1.91	0.55	2.91	1.87	0.60	2.79	1.82	0.65	2.74	1.81	0.67	2.67	1.78	0.70	2.56	1.74	0.75
24.0	32.0	3.14	1.86	0.55	3.02	1.82	0.60	2.90	1.78	0.65	2.86	1.76	0.67	2.79	1.74	0.70	2.67	1.70	0.75

Heating capacity (50 Hz, 230 V)

Indoor	Outdoor temperature (°CDB)									
EDB (°C)	-10		-5		0		6		10	
	TC	PI	TC	PI	TC	PI	TC	PI	TC	PI
15.0	2.29	0.76	2.67	0.79	3.06	2.83	3.52	0.587	3.82	0.90
20.0	2.17	0.78	2.56	0.81	2.94	0.85	3.40	0.90	3.71	0.92
22.0	2.12	0.79	2.51	0.82	2.89	0.86	3.35	0.90	3.66	0.93
24.0	2.08	0.79	2.46	0.83	2.85	0.87	3.31	0.91	3.61	0.94
25.0	2.05	0.80	2.44	0.83	2.82	0.87	3.28	0.92	3.59	0.94
27.0	2.01	0.81	2.39	0.84	2.77	0.88	3.24	0.92	3.54	0.95

SYMBOLS

AFR: Air flow rate [m³/min.]
BF: Bypass factor
EWB: Entering wet bulb temp. [°CWB]
EDB: Entering dry bulb temp. [°CDB]
TC: Total capacity cooling [kW]
SHC: Sensible heat capacity [kW]
PI: Power input [kW]

NOTES

1 Ratings shown are net capacities which include a deduction for indoor fan motor heat.

2 ☐ shows nominal (rated) capacities and power input.

3 TC, PI and SHC must be calculated by interpolation using the figures in the above tables. (Figures out of the tables should not be used for calculation).

4 SHC is based on each EWB and EDB.
SHC1 for any indoor dry-bulb temperatures (EDB1) shall be calculated by the following formula.
SHC*
= correction value of SHC matched with the differential of EDB and EDB1.
= 0.02 x AFR [m3/min.] x (1-BF) x (EDB1-EDB)
The calculation value of SHC1 = SHC + SHC*

5 Capacities are based on the folowing conditions.
Corresponding refrigerant piping length: 7.5m
Level difference: 0m

6 Air flow rate (AFR) and Bypass factor (BF) are tabulated below.

	FI	
	Cooling	Heating
AFR	8.1	9.2
BF	0.29	

3D048346

4 Capacity tables

4 - 1 Cooling/Heating capacity tables

RXS25D-FDXS

Cooling capacity (50 Hz, 230 V)

Indoor		Outdoor temperature (°CDB)																	
EWB (°C)	EDB (°C)	20			25			30			32			35			40		
		TC	SHC	PI	TC	SHC	PI	TC	SHC	PI	TC	SHC	PI	TC	SHC	PI	TC	SHC	PI
14.0	20.0	2.46	1.87	0.65	2.35	1.81	0.71	2.24	1.76	0.77	2.19	1.74	0.80	2.12	1.71	0.84	2.01	1.65	0.90
16.0	22.0	2.57	1.84	0.65	2.46	1.79	0.71	2.35	1.73	0.78	2.30	1.71	0.820	2.23	1.68	0.84	2.12	1.63	0.90
18.0	25.0	2.68	1.93	0.66	2.57	1.88	0.72	2.46	1.84	0.78	2.41	1.82	0.81	2.34	1.79	0.84	2.23	1.74	0.91
19.0	27.0	2.74	2.04	0.66	2.62	2.00	0.72	2.51	1.95	.78	2.47	1.93	0.81	2.40	1.81	0.85	2.29	1.86	0.91
22.0	30.0	2.90	1.97	0.66	2.79	1.93	0.73	2.68	1.89	0.79	2.63	1.88	0.81	2.57	1.85	0.85	2.45	1.81	0.91
24.0	32.0	3.01	1.92	0.67	2.90	1.89	0.73	2.79	1.85	0.79	2.74	1.83	0.82	2.68	1.81	0.85	2.56	1.78	0.92

Heating capacity (50 Hz, 230 V)

Indoor	Outdoor temperature (°CDB)									
EDB (°C)	-10		-5		0		6		10	
	TC	PI	TC	PI	TC	PI	TC	PI	TC	PI
15.0	2.15	0.79	2.52	0.83	2.88	0.87	3.31	0.91	3.60	0.94
20.0	2.04	0.81	2.41	0.85	2.77	0.89	3.20	0.94	3.49	0.97
22.0	1.93	0.83	2.29	0.87	2.66	0.91	3.09	0.96	3.38	0.99
24.0	1.89	0.84	2.25	0.88	2.61	0.92	3.05	0.96	3.33	1.00
25.0	2.00	0.82	2.36	0.86	2.72	0.90	3.16	0.94	3.44	0.97
27.0	1.96	0.83	2.32	0.87	2.68	0.91	3.11	0.95	3.40	0.98

SYMBOLS

AFR: Air flow rate [m³/min.]
BF: Bypass factor
EWB: Entering wet bulb temp. [°CWB]
EDB: Entering dry bulb temp. [°CDB]
TC: Total capacity cooling [kW]
SHC: Sensible heat capacity [kW]
PI: Power input [kW]

NOTES

1 Ratings shown are net capacities which include a deduction for indoor fan motor heat.

2 ☐ shows nominal (rated) capacities and power input.

3 TC, PI and SHC must be calculated by interpolation using the figures in the above tables. (Figures out of the tables should not be used for calculation).

4 SHC is based on each EWB and EDB.
SHC* = SHC correction for other dry bulb.
= 0.02 x AFR [m3/min.] x (1-BF) x (DB*-EDB)
Add SHC* to SHC.

5 Capacities are based on the folowing conditions.
Corresponding refrigerant piping length: 5m
Level difference: 0m

6 Air flow rate (AFR) and Bypass factor (BF) are tabulated below.

	FI	
	Cooling	Heating
AFR	8.4	9.4
BF	0.221	0.087

3D048803

4 Capacity tables

4 - 1 Cooling/Heating capacity tables

RXS35D-FTXS

Cooling capacity (50 Hz, 230 V)

Indoor		Outdoor temperature (°CDB)																	
EWB (°C)	EDB (°C)	20			25			30			32			35			40		
		TC	SHC	PI	TC	SHC	PI	TC	SHC	PI	TC	SHC	PI	TC	SHC	PI	TC	SHC	PI
14.0	20.0	3.31	2.33	0.80	3.31	2.33	0.88	3.17	2.25	0.96	3.10	2.22	0.99	3.01	2.17	1.03	2.85	2.09	1.11
16.0	22.0	3.64	2.38	0.81	3.48	2.30	0.88	3.32	2.22	0.96	3.26	2.19	0.99	3.17	2.14	1.04	3.01	2.07	1.12
18.0	25.0	3.80	2.47	0.81	3.64	2.39	0.89	3.48	2.32	0.97	3.42	2.29	1.00	3.32	2.24	1.04	3.16	2.17	1.12
19.0	27.0	3.87	2.57	0.81	3.72	2.50	0.89	3.56	2.43	0.97	3.49	2.40	1.00	3.40	2.36	1.05	3.24	2.29	1.12
22.0	30.0	4.11	2.47	0.82	3.95	2.41	0.90	3.79	2.35	0.97	3.73	2.32	1.01	3.63	2.28	1.05	3.48	2.22	1.13
24.0	32.0	4.27	2.40	0.82	4.11	2.34	0.90	3.95	2.28	0.98	3.89	2.26	1.01	3.79	2.23	1.06	3.63	2.17	1.13

Heating capacity (50 Hz, 230 V)

Indoor	Outdoor temperature (°CDB)									
EDB (°C)	-10		-5		0		6		10	
	TC	PI	TC	PI	TC	PI	TC	PI	TC	PI
15.0	2.69	0.98	3.14	1.02	3.60	1.07	4.14	1.13	4.50	1.17
20.0	2.55	1.00	3.01	1.05	3.46	1.10	4.00	1.16	4.36	1.19
22.0	2.50	1.01	2.95	1.06	3.40	1.11	3.94	1.17	4.31	1.20
24.0	2.44	1.02	2.90	1.07	3.35	1.12	3.89	1.18	4.25	1.21
25.0	2.42	1.03	2.87	1.08	3.32	1.12	3.86	1.18	4.22	1.22
27.0	2.36	1.04	2.81	1.09	3.26	1.13	3.81	1.19	4.17	1.23

SYMBOLS

AFR: Air flow rate [m³/min.]
BF: Bypass factor
EWB: Entering wet bulb temp. [°CWB]
EDB: Entering dry bulb temp. [°CDB]
TC: Total capacity cooling [kW]
SHC: Sensible heat capacity [kW]
PI: Power input [kW]

NOTES

1 Ratings shown are net capacities which include a deduction for indoor fan motor heat.

2 ☐ shows nominal (rated) capacities and power input.

3 TC, PI and SHC must be calculated by interpolation using the figures in the above tables. (Figures out of the tables should not be used for calculation).

4 SHC is based on each EWB and EDB.
SHC1 for any indoor dry-bulb temperatures (EDB1) shall be calculated by the following formula.
SHC*
= correction value of SHC matched with the differential of EDB and EDB1.
= 0.02 x AFR [m3/min.] x (1-BF) x (EDB1-EDB)
The calculation value of SHC1 = SHC + SHC*

5 Capacities are based on the folowing conditions.
Corresponding refrigerant piping length: 7.5m
Level difference: 0m

6 Air flow rate (AFR) and Bypass factor (BF) are tabulated below.

	FI	
	Cooling	Heating
AFR	8.9	9.7
BF	0.24	

3D048108

4 Capacity tables

4 - 1 Cooling/Heating capacity tables

RXS35D-FLXS

Cooling capacity (50 Hz, 230 V)

Indoor		Outdoor temperature (°CDB)																	
EWB (°C)	EDB (°C)	20			25			30			32			35			40		
		TC	SHC	PI	TC	SHC	PI	TC	SHC	PI	TC	SHC	PI	TC	SHC	PI	TC	SHC	PI
14.0	20.0	2.72	1.92	0.89	2.72	1.92	0.98	2.72	1.92	1.06	2.72	1.92	1.10	2.72	1.92	1.15	2.72	1.92	1.23
16.0	22.0	3.34	2.14	0.90	3.34	2.14	0.98	3.34	2.14	1.07	3.34	2.14	1.10	3.26	2.10	1.15	3.10	2.01	1.24
18.0	25.0	3.91	2.42	0.90	3.75	2.34	0.99	3.58	2.26	1.07	3.52	2.22	1.11	3.42	2.17	1.16	3.26	2.09	1.24
19.0	27.0	3.99	2.51	0.90	3.83	2.43	0.99	3.66	2.34	1.07	3.60	2.31	1.11	3.50	2.27	1.16	3.34	2.19	1.25
22.0	30.0	4.23	2.40	0.91	4.07	2.33	1.00	3.90	2.26	1.08	3.84	2.23	1.12	3.74	2.19	1.17	3.58	2.12	1.25
24.0	32.0	4.39	2.32	0.92	4.23	2.26	1.00	4.07	2.19	1.09	4.00	2.16	1.12	3.90	2.13	1.17	3.74	2.06	1.26

Heating capacity (50 Hz, 230 V)

Indoor	Outdoor temperature (°CDB)									
EDB (°C)	-10		-5		0		6		10	
	TC	PI	TC	PI	TC	PI	TC	PI	TC	PI
15.0	2.69	1.05	3.14	1.10	3.60	1.16	4.14	1.22	4.50	1.26
20.0	2.55	1.08	3.01	1.13	3.46	1.18	4.00	1.25	4.36	1.29
22.0	2.50	1.09	2.95	1.14	3.40	1.19	3.94	1.26	4.31	1.30
24.0	2.44	1.10	2.90	1.15	3.35	1.21	3.89	1.27	4.25	1.31
25.0	2.42	1.11	2.87	1.16	3.32	1.21	3.86	1.27	4.18	1.31
27.0	2.36	1.12	2.81	1.17	3.26	1.22	3.81	1.28	3.91	1.31

SYMBOLS

AFR: Air flow rate [m³/min.]
BF: Bypass factor
EWB: Entering wet bulb temp. [°CWB]
EDB: Entering dry bulb temp. [°CDB]
TC: Total capacity cooling [kW]
SHC: Sensible heat capacity [kW]
PI: Power input [kW]

NOTES

1 Ratings shown are net capacities which include a deduction for indoor fan motor heat.

2 ☐ shows nominal (rated) capacities and power input.

3 TC, PI and SHC must be calculated by interpolation using the figures in the above tables. (Figures out of the tables should not be used for calculation).

4 SHC is based on each EWB and EDB.
SHC1 for any indoor dry-bulb temperatures (EDB1) shall be calculated by the following formula.
SHC*
= correction value of SHC matched with the differential of EDB and EDB1.
= 0.02 x AFR [m3/min.] x (1-BF) x (EDB1-EDB)
The calculation value of SHC1 = SHC + SHC*

5 Capacities are based on the folowing conditions.
Corresponding refrigerant piping length: 7.5m
Level difference: 0m

6 Air flow rate (AFR) and Bypass factor (BF) are tabulated below.

	FI	
	Cooling	Heating
AFR	8.6	9.8
BF	0.35	

3D048352

4 Capacity tables

4 - 1 Cooling/Heating capacity tables

RXS35D-FVXS

Cooling capacity (50 Hz, 230 V)

Indoor		Outdoor temperature (°CDB)																	
EWB (°C)	EDB (°C)	20			25			30			32			35			40		
		TC	SHC	PI	TC	SHC	PI	TC	SHC	PI	TC	SHC	PI	TC	SHC	PI	TC	SHC	PI
14.0	20.0	3.52	2.48	0.84	3.42	2.43	0.92	3.26	2.34	1.00	3.19	2.31	1.03	3.10	2.26	1.08	2.93	2.17	1.16
16.0	22.0	3.75	2.47	0.84	3.58	2.39	0.92	3.42	2.31	1.00	3.36	2.27	1.03	3.26	2.23	1.08	3.10	2.15	1.16
18.0	25.0	3.91	2.56	0.85	3.75	2.48	0.93	3.58	2.41	1.01	3.52	2.38	1.04	3.42	2.34	1.09	3.26	2.26	1.17
19.0	27.0	3.99	2.68	0.85	3.83	2.60	0.93	3.66	2.53	1.01	3.60	2.50	1.04	3.50	2.46	1.09	3.34	2.39	1.17
22.0	30.0	4.23	2.57	0.86	4.07	2.51	0.94	3.90	2.44	1.02	3.84	2.42	1.05	3.74	2.38	1.10	3.58	2.32	1.18
24.0	32.0	4.39	2.50	0.86	4.23	2.44	0.94	4.07	2.38	1.02	4.00	2.36	1.05	3.90	2.32	1.10	3.74	2.26	1.18

Heating capacity (50 Hz, 230 V)

Indoor	Outdoor temperature (°CDB)									
EDB (°C)	-10		-5		0		6		10	
	TC	PI	TC	PI	TC	PI	TC	PI	TC	PI
15.0	3.03	1.12	3.54	1.17	4.05	1.23	4.66	1.29	5.06	1.33
20.0	2.87	1.15	3.38	1.20	3.89	1.25	4.50	1.32	4.91	1.36
22.0	2.81	1.16	3.32	1.21	3.83	1.27	4.44	1.33	4.84	1.38
24.0	2.75	1.17	3.26	1.22	3.77	1.28	4.38	1.34	4.78	1.39
25.0	2.72	1.18	3.23	1.23	3.73	1.28	4.34	1.35	4.75	1.39
27.0	2.66	1.19	3.16	1.24	3.67	1.30	4.28	1.36	4.69	1.41

SYMBOLS

AFR: Air flow rate [m³/min.]
BF: Bypass factor
EWB: Entering wet bulb temp. [°CWB]
EDB: Entering dry bulb temp. [°CDB]
TC: Total capacity cooling [kW]
SHC: Sensible heat capacity [kW]
PI: Power input [kW]

NOTES

1 Ratings shown are net capacities which include a deduction for indoor fan motor heat.

2 ☐ shows nominal (rated) capacities and power input.

3 TC, PI and SHC must be calculated by interpolation using the figures in the above tables. (Figures out of the tables should not be used for calculation).

4 SHC is based on each EWB and EDB.
SHC1 for any indoor dry-bulb temperatures (EDB1) shall be calculated by the following formula.
SHC*
= correction value of SHC matched with the differential of EDB and EDB1.
= 0.02 x AFR [m3/min.] x (1-BF) x (EDB1-EDB)
The calculation value of SHC1 = SHC + SHC*

5 Capacities are based on the folowing conditions.
Corresponding refrigerant piping length: 7.5m
Level difference: 0m

6 Air flow rate (AFR) and Bypass factor (BF) are tabulated below.

	FI	
	Cooling	Heating
AFR	8.3	9.2
BF	0.13	

3D048348

4 Capacity tables

4 - 1 Cooling/Heating capacity tables

RXS35D-FDXS

Cooling capacity (50 Hz, 230 V)

Indoor		Outdoor temperature (°CDB)																	
EWB (°C)	EDB (°C)	20			25			30			32			35			40		
		TC	SHC	PI	TC	SHC	PI	TC	SHC	PI	TC	SHC	PI	TC	SHC	PI	TC	SHC	PI
14.0	20.0	3.22	2.27	1.00	3.22	2.27	1.09	3.17	2.24	1.19	3.10	2.21	1.23	3.01	2.16	1.29	2.85	2.07	1.38
16.0	22.0	3.64	2.37	1.00	3.48	2.29	1.10	3.32	2.21	1.20	3.26	2.18	1.23	3.17	2.13	1.29	3.01	2.05	1.39
18.0	25.0	3.80	2.45	1.01	3.64	2.37	1.10	3.48	2.30	1.20	3.42	2.27	1.24	3.32	2.23	1.30	3.16	2.15	1.39
19.0	27.0	3.87	2.55	1.01	3.72	2.48	1.11	3.56	2.41	1.20	3.49	2.38	1.24	3.40	2.34	1.30	3.24	2.27	1.40
22.0	30.0	4.11	2.45	1.02	3.95	2.39	1.12	3.79	2.32	1.21	3.73	2.30	1.25	3.63	2.26	1.31	3.48	2.20	1.40
24.0	32.0	4.27	2.38	1.03	4.11	2.32	1.12	3.95	2.26	1.22	3.89	2.24	1.26	3.79	2.20	1.31	3.63	2.15	1.41

Heating capacity (50 Hz, 230 V)

Indoor	Outdoor temperature (°CDB)									
EDB (°C)	-10		-5		0		6		10	
	TC	PI	TC	PI	TC	PI	TC	PI	TC	PI
15.0	2.76	1.22	3.22	1.28	3.69	1.34	4.24	1.41	4.61	1.46
20.0	2.62	1.25	3.08	1.31	3.54	1.37	4.10	1.44	4.47	1.49
22.0	2.48	1.28	2.94	1.34	3.40	1.40	3.96	1.47	4.33	1.52
24.0	2.42	1.30	2.88	1.35	3.35	1.41	3.90	1.49	4.27	1.53
25.0	2.56	1.26	3.02	1.32	3.49	1.38	4.04	1.45	4.41	1.50
27.0	2.51	1.28	2.97	1.34	3.43	1.39	3.99	1.47	4.36	1.51

SYMBOLS

AFR: Air flow rate [m³/min.]
BF: Bypass factor
EWB: Entering wet bulb temp. [°CWB]
EDB: Entering dry bulb temp. [°CDB]
TC: Total capacity cooling [kW]
SHC: Sensible heat capacity [kW]
PI: Power input [kW]

NOTES

1 Ratings shown are net capacities which include a deduction for indoor fan motor heat.

2 ☐ shows nominal (rated) capacities and power input.

3 TC, PI and SHC must be calculated by interpolation using the figures in the above tables. (Figures out of the tables should not be used for calculation).

4 SHC is based on each EWB and EDB.
SHC1 for any indoor dry-bulb temperatures (EDB1) shall be calculated by the following formula.
SHC*
= correction value of SHC matched with the differential of EDB and EDB1.
= 0.02 x AFR [m3/min.] x (1-BF) x (EDB1-EDB)
The calculation value of SHC1 = SHC + SHC*

5 Capacities are based on the folowing conditions.
Corresponding refrigerant piping length: 7.5m
Level difference: 0m

6 Air flow rate (AFR) and Bypass factor (BF) are tabulated below.

	FI	
	Cooling	Heating
AFR	8.9	10.6
BF	0.257	0.123

3D048799

5 Dimensional drawing & centre of gravity

5 - 1 Dimensional drawing

RXS-D

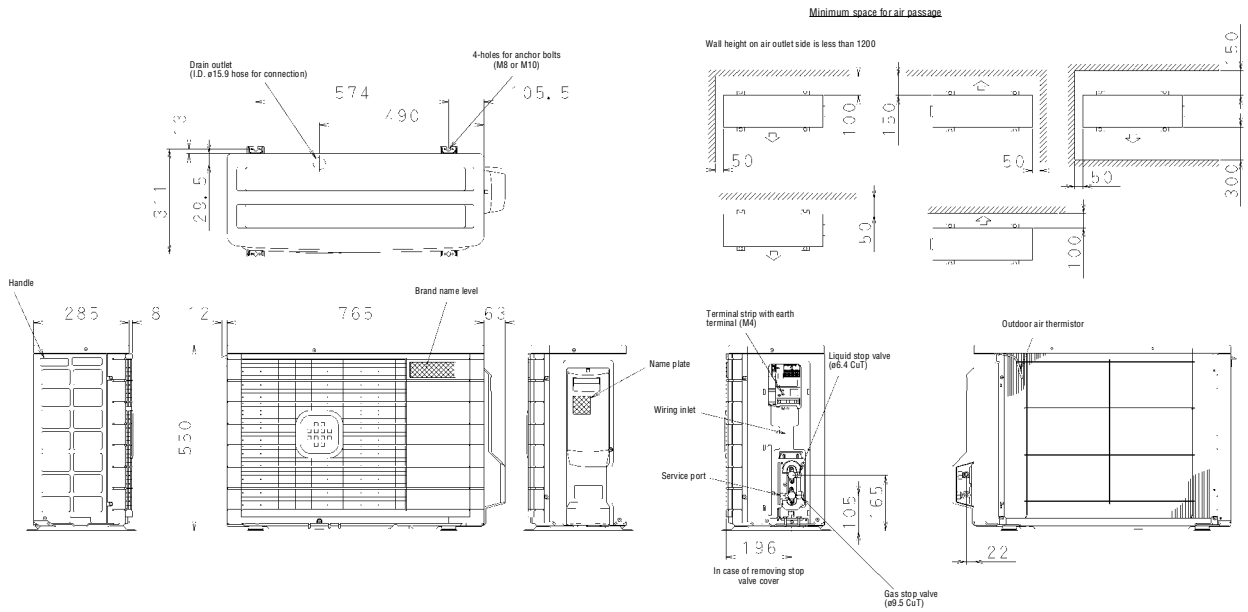

3D041800D

5 Dimensional drawing & centre of gravity

5 - 2 Centre of gravity

RXS-D

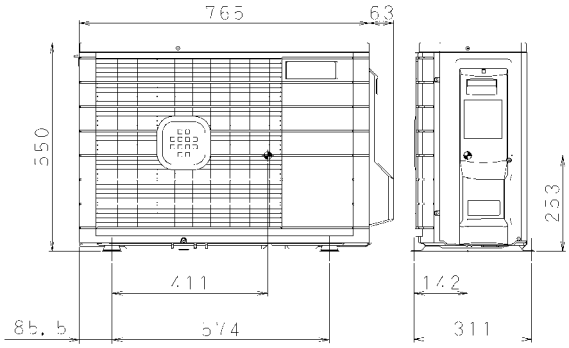

4D044107D

6 Piping diagram

RXS20,25D

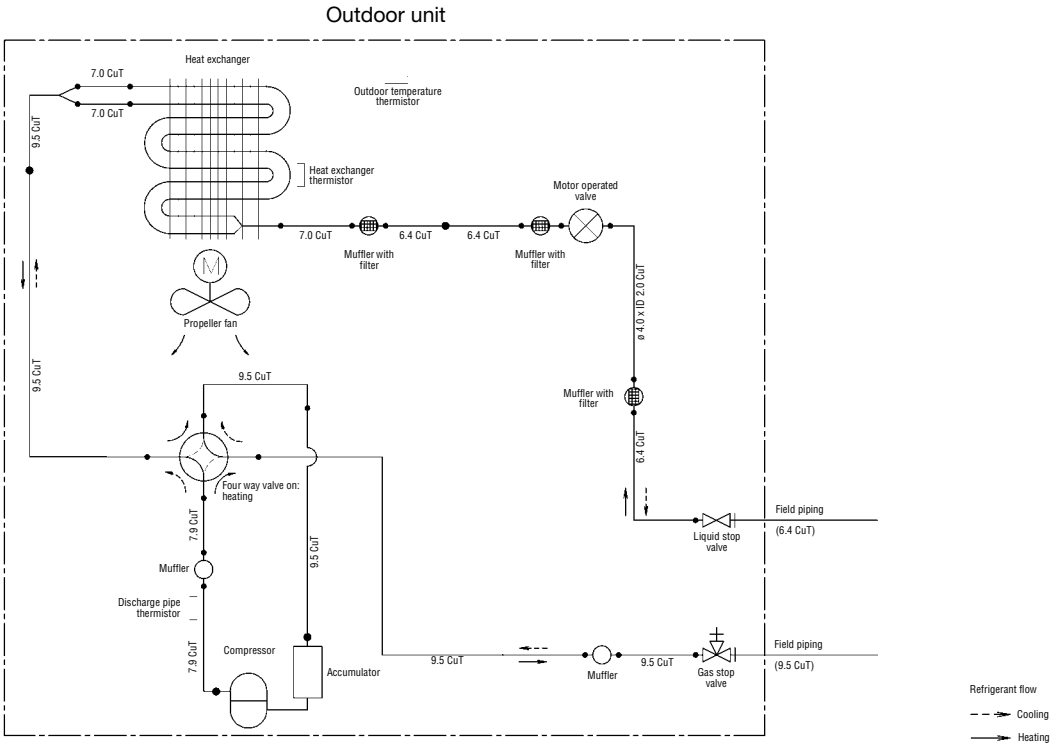

3D047315

RXS35D

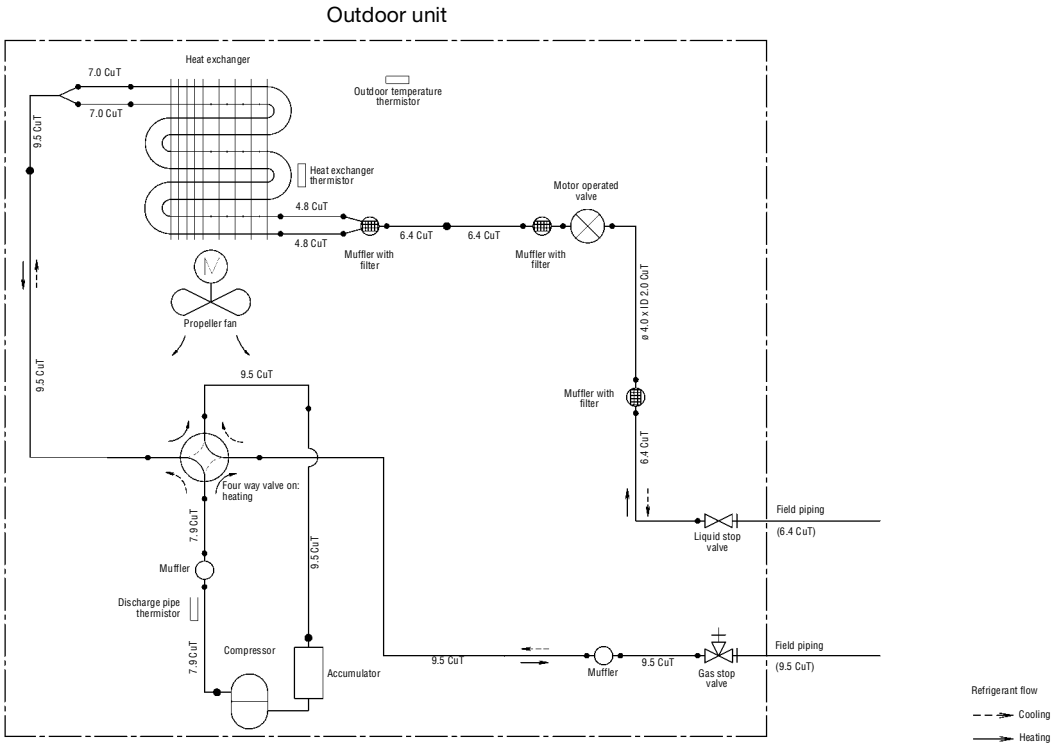

3D047316

7 Wiring diagram

7 - 1 Wiring diagram

RXS-D

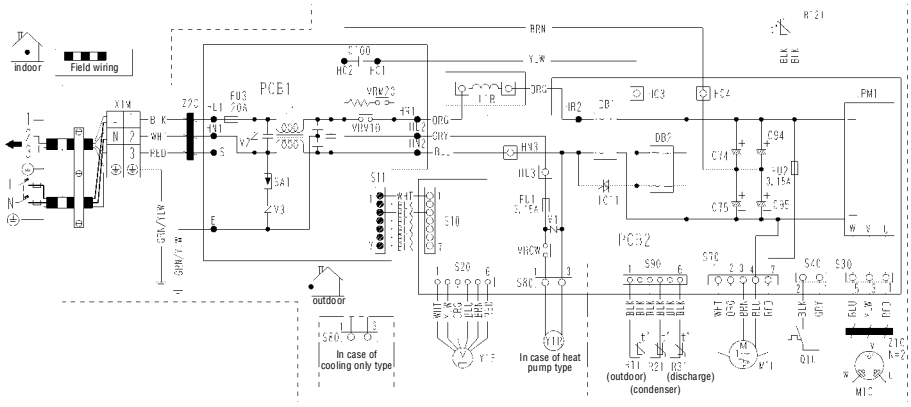

NOTES

1. Size: length 105 x width 185.
2. Refer to purchasing specification AS(Y)303002, unless otherwise specified.
3. This drawing was drawn on CAD system.
4. Refer to the nameplate for the power requirements.

LEGEND

⏚	Protective earth
C74, C75, C94, C95, C100	Capacitor
DB1, DB2	Diode bridge
FU1, FU2, FU3	Fuse
IC11	Triac
IPM1	Intelligent power module
L	Live
L1	Coil
L1R	Reactor
M1C	Compressor motor
M1F	Fan motor
MRCW, MRM10, MRM20	Magnetic relay
N	Neutral
PCB1, PCB2	Printed circuit board
Q1L	Overload protector
R1T, R2T, R3T, R12T	Thermistor
S10, S11, S20, S30, S40, S70, S80, S90, S91, HC3, HC4, HL3, HN3	Connector
SA1	Surge arrester
V1, V2, V3	Varistor
X1M	Terminal strip
Y1E	Electronic expansion valve coil
Y1R	Reversing solenoid valve coil
Z1C, Z2C	Ferrite core

3D046707A

8 Sound data

8 - 1 Sound pressure spectrum

RXS20,25D

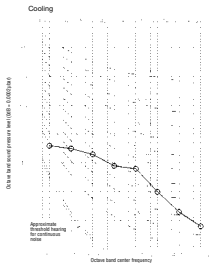

NOTES

1 Measurement was taken in an anechoic room.
2 The operation noise measuring method is in accordance with JISC9612.
3 Operating conditions:
Power source = 220-240 V, 50/60 Hz
o-----o H (A = 46)
4 Operation noise differs with operation and ambient conditions.

Location of microphone

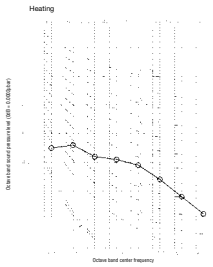

NOTES

1 Measurement was taken in an anechoic room.
2 The operation noise measuring method is in accordance with JISC9612.
3 Operating conditions:
Power source = 220-240 V, 50/60 Hz
o-----o H (A = 47)
4 Operation noise differs with operation and ambient conditions.

Location of microphone

3D047725

RXS35D

NOTES

1 Measurement was taken in an anechoic room.
2 The operation noise measuring method is in accordance with JISC9612.
3 Operating conditions:
Power source = 220-240 V, 50/60 Hz
o-----o H (A = 47)
4 Operation noise differs with operation and ambient conditions.

Location of microphone

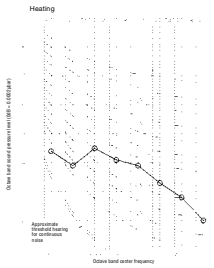

NOTES

1 Measurement was taken in an anechoic room.
2 The operation noise measuring method is in accordance with JISC9612.
3 Operating conditions:
Power source = 220-240 V, 50/60 Hz
o-----o H (A = 48)
4 Operation noise differs with operation and ambient conditions.

Location of microphone

3D047726

8

9 Operation range

RXS-D

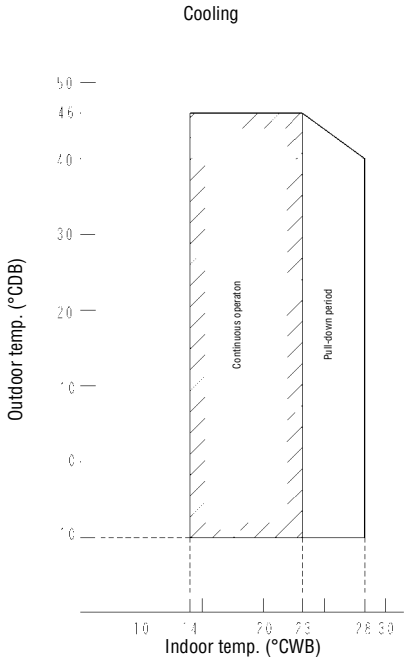

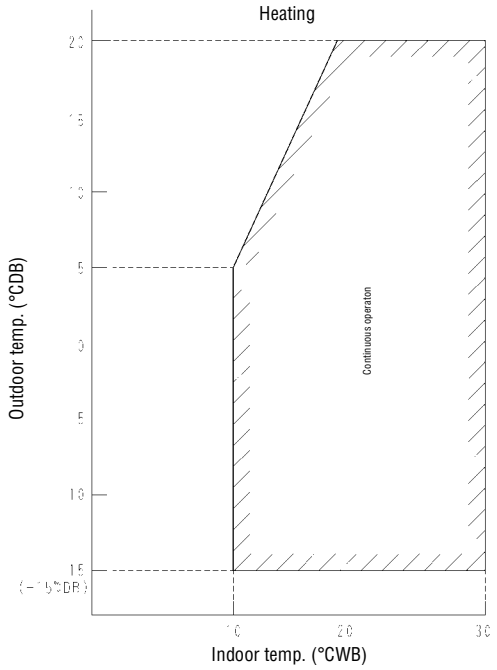

NOTES

The graphs are based on the following conditions:

1 Equivalent piping length: 7.5m
2 Level difference: 0m
3 Air flow rate: high

3D039536D

Split - Sky Air

The present publication is drawn up by way of information only and does not constitute an offer binding upon Daikin Europe N.V.. Daikin Europe N.V. has compiled the content of this publication to the best of its knowledge. No express or implied warranty is given for the completeness, accuracy, reliability or fitness for particular purpose of its content and the products and services presented therein. Specifications are subject to change without prior notice. Daikin Europe N.V. explicitly rejects any liability for any direct or indirect damage, In the broadest sense, arising from or related to the use and/or interpretation of this publication. All content is copyrighted by Daikin Europe N.V..

ISO14001 assures an effective environmental management system in order to help protect human•health•and the environment from the potential impact of our activities, products and services and to assist in maintaining and improving the quality of the•environment.

Daikin units comply with the European regulations that guarantee the safety of the product.

Daikin Europe N.V. is approved by LRQA for its Quality Management System in accordance with the ISO9001 standard. ISO9001 pertains to quality assurance regarding design, development, manufacturing as well as to services related to the product.

Daikin Europe N.V. is participating in the EUROVENT Certification Programme. Products are as listed in the EUROVENT Directory of Certified Products.

DAIKIN EUROPE N.V.

Zandvoordestraat 300
B-8400 Ostend - Belgium
www.daikineurope.com

EEDE06-1/3 • 05/2006
Prepared in Belgium by Lannoo

EEDE06-1/3